NO. 42 NOTES FROM THE SHOP $2.50

Woodsmith®

Woodsmith®

Number 42 Nov./Dec., 1985

Editor
Donald B. Peschke

Design Director
Ted Kralicek

Assistant Editors
Steve Krohmer
Douglas L. Hicks
Douglas M. Lidster

Technical Illustrators
David Kreyling
Mike Henry

Subscription Manager
Sandy J. Baum

Subscription Assistants
Christel Miner
Vicky Robinson
Jackie Stroud

Computer Operations
Ken Miner

Circulation Manager
Jeff Farris

Administrative Assistant
Cheryl Scott

Building Maintenance
Archie Krause

WOODSMITH (ISSN 0164-4114) is published bimonthly (January, March, May, July, September, November) by Woodsmith Publishing Co., 2200 Grand Ave., Des Moines, Iowa 50312.
WOODSMITH is a registered trademark of the Woodsmith Publishing Co.
©**Copyright 1985** by Woodsmith Publishing Co. All Rights Reserved.
Subscriptions: One year (6 issues) $10, Two years (12 issues) $18. Single copy price, $2.50 (Canada and Foreign: add $2 per year.)
Change Of Address: Please be sure to include both your old and new address.
Second class postage paid at Des Moines, Iowa.
Postmaster: Send change of address notice, Form 3579, to Woodsmith Publishing Co., 2200 Grand Ave., Des Moines, Iowa 50312.

BACK ISSUES

All back issues of *Woodsmith* are still available. Send for a free booklet describing the contents and prices of all back issues.

SAMPLE COPIES

If you have a friend who would like to see a copy of **Woodsmith**, just send the name and address, and we'll send a sample (at no cost).

Sawdust

ABOUT THIS ISSUE. If there's one trait that seems to be common to all woodworkers, it has to be the ability to plan ahead. Granted, there's the physical side of woodworking — mastering the tools and getting them to do what you want done.

But the real challenge, the mental challenge, is the ability to anticipate problems long before they become problems.

This was certainly the case in building the tool cabinet shown in this issue. The original idea was to build a cabinet for tools. But the whole design actually hinged around the last step in the construction process. It's kind of a shaggy dog story.

Although the cabinet was the primary goal, I also wanted to add a drawer unit below the cabinet. Since I planned to use box joints to build the drawers, the drawer unit had to be sized to accommodate drawers with nicely spaced box joints.

The box joints also had to be planned out so the groove for the drawer bottom would be in the right position so it wouldn't show on the front of the drawer.

In effect, the cabinet was planned around cutting the groove for the drawer bottom — which is one of the last things done.

Once all the planning was out of the way, I had a lot of fun working on this tool cabinet. It seems that projects for the shop always get postponed to a spare weekend that never comes. But I finally decided that now was the time to have a little fun and build this cabinet.

TWO TIPS. I wanted to be sure to mention a tip we used in this issue that falls in the category of how to get a hand when there's no hand around.

One of the most frustrating moments in woodworking seems to come during the final stage of gluing and clamping a project together. It's then that things have to move smoothly and efficiently . . . but never do.

I always seem to need a helping hand just when everyone is gone. But not any more. I've discovered the joys of carpet tape (the heavy-duty double-sided tape used to lay carpeting). This stuff will hold just about anything in place while I'm fumbling around with the clamps (see the first tip in Tips & Techniques).

There's another good tip in this issue that I wanted to be sure to mention. It involves one of woodworking's most enjoyable challenges . . . mounting hinges.

If you've ever tried to mount hinges to a door, you know there can be problems getting the holes for the screws right where they're supposed to be. Mounting the first leaf is not too bad. But aligning the other leaf can be a little disconcerting.

That is, it was until I made my own little pointers to locate the screw holes. Be sure to see this tip on page 8.

FINISHING. Doug Hicks is continuing his series on finishing with an article on "finishing the finish" in this issue. In a way, we're kind of getting ahead of ourselves with this article. But we were faced with a dilemma about the sequence of things.

The next articles we have planned are about applying the various top coats: varnish, polyurethane, shellac, and lacquer. But the critical part of dealing with all these finishes is using the right technique to "finish the finish."

This is done with a collection of abrasives: sandpaper, steel wool, pumice, rottenstone, and several products that help the abrasives do their job.

But rather than repeat the description of all these products in each of the articles on top coats, we thought we'd cover all the abrasives first, and give the basic methods for using them.

In future articles, we plan to present step-by-step procedures for applying various top coats, and how to rub them down (with the products mentioned in this issue) to achieve the results you want.

HELP WANTED. We're looking for some help. We'd like to find a uniquely qualified person to help work on the technical illustrations for *Woodsmith*.

I know this is an odd approach — normally help-wanted ads don't appear as part of the editorial of a magazine. But we have a unique situation. There just isn't a large pool of artists with experience at doing artwork for woodworking magazines — especially the kind of step-by-step drawings we use.

Now before I go any further, I have to say what this job is *not*. It is not an apprenticeship for woodworking. We've had a lot of inquiries from people interested in working in the *Woodsmith* shop. But that's not really what we need.

What we're looking for is someone who is a qualified technical illustrator (or has strong drafting experience) and also has a love for woodworking.

If you meet these initial qualifications, and would like to work at *Woodsmith*, send us your resume and some photocopies of your recent work. Send them to: Ted Kralicek, 2200 Grand Ave., Des Moines, IA 50312. When we receive your resume, we'll let you know about the rest of the qualification procedure.

NEXT MAILING. The January/February issue of *Woodsmith* (No. 43) will be mailed during the week of February 17, 1986.

Tips & Techniques

CARPET TAPE TO THE RESCUE

There are a lot of times when I need an extra pair of hands. It usually happens right in the middle of gluing and clamping a cabinet together and I'm having trouble getting even clamping pressure.

For example, when I'm trying to clamp a shelf into a dado in a cabinet side, or clamping dividers between two pieces (as on the tool cabinet shown in this issue).

In the past, I've put a clamping block on edge across the joint to apply pressure the full width of the joint. But it's impossible to hold the block and tighten the clamps at the same time.

The solution I just recently discovered is to apply a patch of double-sided carpet tape (see Sources, pg. 24) to the center of the clamping block.

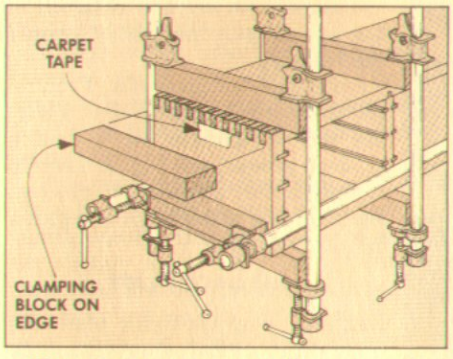

The carpet tape actually solves two problems: First, it frees up your hands for clamping — just stick the block in place and it will stay there while you're positioning and tightening the clamps.

The tape also adds a bulge at the center of the block so pressure is applied to the middle of the block as well as the ends.

DOWEL JIG

Upon reading the article in *Woodsmith* No. 39 describing a dowel-making jig for the router table, I immediately questioned one part. To make the last few inches of the dowel, you had to remove the partly completed dowel from the fixture, turn it end for end, and re-chuck it.

The problem is that when the end originally chucked becomes free it flops about in the larger hole. I have a better solution.

First, shut down the power to the router and the drill and unchuck the dowel.

Second, move the drill to the *opposite* end of the dowel and rechuck the dowel.

Third, *reverse* the drill rotation so that the dowel rotation will still be in the same direction that it originally turned.

Finally, turn on the router and the drill and *pull* the dowel the rest of the way through the jig. The larger hole will support the square (unturned) part of the

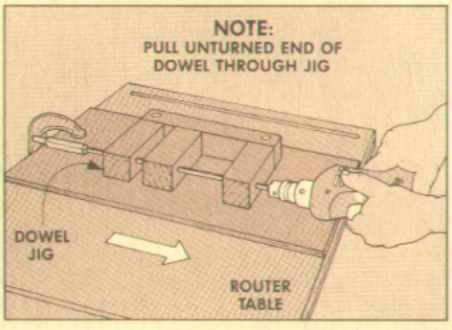

dowel during most of the final turning operation. The smaller diameter end is only in the larger hole for a short distance.

John Sanders
Clinton, Missouri

PAPER SHIMS

When cutting critical grooves on the router table, such as dovetail grooves, I often find it difficult to make minute adjustments to the fence.

When I find that a groove is too tight, I place a sheet of paper over the fence to slightly change the position of the workpiece. If it's not enough, I add another sheet or piece of thin cardboard until I get the exact size groove I want.

Henry R. Howard
Flushing, New York

CHECKING THE TABLE SAW

No matter how many times I tried I wasn't able to get a *clean* crosscut on my table saw without binding and burning. Finally, I decided that maybe the miter gauge slot wasn't parallel with the saw blade. If this was the case, I wouldn't get a clean cut even if the miter gauge was set at 90°.

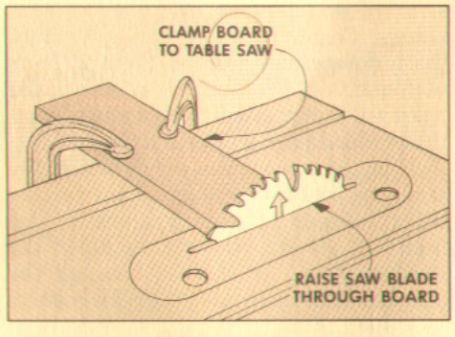

To check a table saw, lower the blade below the table top and clamp a board over the blade opening. Then turn on the saw and raise the blade until it cuts all the way through the board.

Next, check that the miter gauge head is set to exactly 90°. To check it, turn the miter gauge upside down in the table slot and bring it up tight against the front edge of the table. (The front edge of the saw table should be perpendicular to the slot. If in doubt, check it with a square.)

Then flip the miter gauge over in its normal position and lower the blade. Finally, place a framing square against the cut end of the board and the miter gauge.

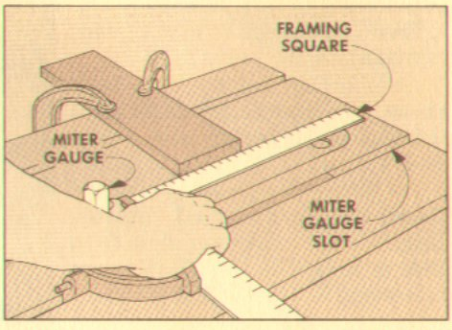

If the framing square doesn't fit tight against the board and the miter gauge, then the miter gauge slot is not parallel with the blade and the whole table top needs adjustment. (Editor's note: This usually involves readjusting bolts in the saw's trunnions — see the owner's manual for your table saw.)

Charles Turney
Beloit, Wisconsin

STEEL WOOL PARTICLES

During finishing, I often use steel wool between coats. Afterwards, I vacuum or wipe away most of the steel wool particles. But there are always some particles that get stuck back in corners or down in the grain of the wood.

To remove these particles, wrap a layer of cheesecloth around a magnet and pass the magnet over the workpiece. Occasionally shake out the cloth to rid the magnet of the particles.

Robert A. Grace
St. Joseph, Michigan

SEND IN YOUR IDEAS

If you'd like to share a woodworking tip with other readers of *Woodsmith*, send your idea to: *Woodsmith*, Tips & Techniques, 2200 Grand Ave., Des Moines, Iowa 50312.

We pay a minimum of $10 for tips, and $15 or more for special techniques (that are accepted for publication). Please give a complete explanation of your idea. If a sketch is needed, send it along; we'll draw a new one.

Old-Fashioned Wall Phone

A CONVERSATION PIECE

When I was recently faced with the choice of buying or continuing to rent my phone at home, I decided to visit a Phone Store in my neighborhood to see what they had.

There was an incredible choice: Trimline phones, wireless phones, auto-redial phones, and even a Mickey Mouse phone. It was more than I could take, so I went home.

Then I came across a source for reproduction hardware and modern innards for an old wooden crank phone. (See Sources, pg. 24.) That, I thought, is the perfect phone for a woodworker.

The basic design of the phone shown here isn't original. Western Electric made millions of these from 1900 to 1913. But the design we're presenting is a nice blend of the old style with modern convenience — it has a classic look but you don't have to ring twice to get the operator.

The phone mechanism is mounted inside a box that's joined together with box joints. There's also an angled note pad attached to the door of the box with a compartment under the pad that houses the modern "touch-tone" keypad. I started by building the front "door" and back plate for the main box.

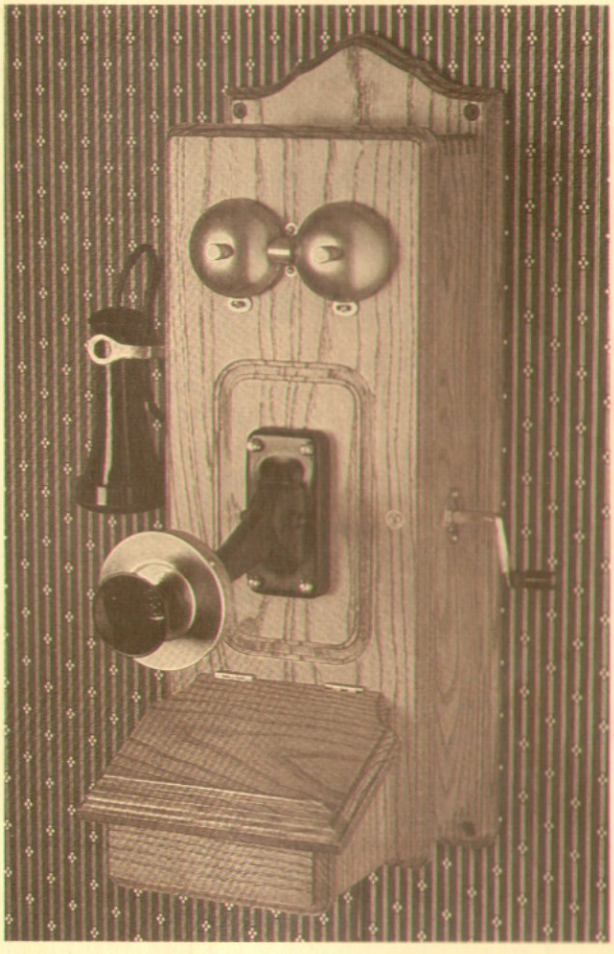

THE DOOR

Begin work on the door (A) of the box by edge gluing three pieces of 4/4 (13/16" thick) stock together to make a blank with rough dimensions of 8" wide by 20" long. (Shop Note: To prevent warping, I glued up three pieces of stock to width rather than using one wide board.)

Once the glue is dry and the blank planed flat, cut it to finished dimensions of 7¼" by 18¼", see Fig. 1.

SOUND HOLES. After the door is cut to size, drill two 1⅜"-dia. holes to allow the sound of the ringing to escape the box. (The bells on the outside are just for decoration, the actual ringing bells are inside, refer to Fig. 27.) Center these holes 2¼" from each side and 3" down from the top, see Fig. 1.

PICTURE FRAME FRONT. One of the distinctive features of this phone is the decorative relief groove (known as a "picture frame front") surrounding the transmitter (mouthpiece). To make this groove, I used a template and a router with a guide bushing attachment. (See Sources, pg. 24, for more on guide bushings.)

Cut the template from a piece of ½" plywood so it's 3 3/16" wide by 6⅞" long, see Fig. 2. Then round the corners to a ½" radius (using a 25¢ piece as a template on the corners).

To temporarily hold the template to the front door while routing, drill two countersink holes in the template for flat-head screws. Center the holes on the width of the template and position them 2" from each end, see Fig. 2. (This positions the holes so the transmitter arm hardware that's added later will hide them.)

After the screw holes are drilled in the template, position the template on the door. Center it on the width, and 5⅝" up from the bottom, see Fig. 2. Mark the location of the screw holes through the template with an awl and drill pilot holes at each mark. Finally, screw the template to the door with flat-head screws.

ROUTING THE GROOVE. Now the groove can be routed around the template. This groove has a stair-step profile (see Cross Section in Fig. 3), and is routed in two passes. The first pass is made with a ¼" straight bit. Then the groove is widened on the second pass with a ½" straight bit.

To guide the router to cut these grooves, a ⅝" bushing is mounted to the router base. This bushing rubs against the edge of the template as the router is moved around the template, see Fig. 4.

Since it's a little tricky to hold the bushing tight against the template while routing, I made some practice grooves around a template on a piece of scrap. Move the router *counter-clockwise* around the template being extra careful to hold in at the corners, see Fig. 3. (By moving it counter-clockwise, the rotation of the bit will pull the router against the template.)

Once I got the hang of it, I routed the grooves in the actual door. First, use the ¼" straight bit to rout a ⅛"-deep groove, see Fig. 4. Then to complete the decorative groove, switch to a ½" straight bit and rout a 1/16"-deep groove.

THE BACK PLATE

Next, glue up the back plate (B) from three pieces of 4/4 stock to rough dimensions of 8½" wide by 25" long. After the glue is dry and the blank planed flat, cut it to 7¾" by 23", see Fig. 1.

CATHEDRAL TOP. A common feature found on these phones is the "cathedral top" profile on the back plate. To lay out this profile, start by locating the center-points for the arcs, see Fig. 5.

Then use a compass to draw the intersecting arcs and cut out the profile with a bandsaw or sabre saw. And finish up by smoothing the edges with a sanding drum.

CUT TO FINAL LENGTH. After the top profile is cut and sanded, cut the back plate to final size by measuring down 21⅛" from the peak of the top profile and trim the waste off the bottom, see Fig. 1.

GROOVE IN BACK. The phone plugs into a wall jack with a modular plug that's on the end of a cloth-covered cord. The cord passes through a hole in the back plate and runs down through a groove on the back face of the back plate and then out the bottom, refer to Fig. 27.

To make this groove for the cord, start by drilling a ¼" hole through the back plate. Center the hole on the width and 6¾" up from the bottom, see Fig. 1.

Then mount a ¼" straight bit on the router table and set it to make a ¼"-deep cut. Next, place the hole in the workpiece over the bit with the bottom end of the back plate to the right, see Fig. 6.

Now bring the router table fence up tight against the edge of the workpiece and tighten it down. Finally, to make the groove, turn on the router and push the workpiece to the left along the fence until the bit comes out the bottom end.

Shop Note: This groove could also be cut with a hand-held router and an edge guide.

WALL MOUNTING HOLES. To mount the phone on the wall, I drilled 3/16"-dia. counterbored shank holes in each of the four corners of the back plate, see Fig. 7. (I used 2½"-long, flat-head machine screws with butterfly toggles to anchor the phone to the wall, refer to Fig. 29.) Locate each hole ¾" from the side and ¾" from the end, see Fig. 1.

ROUNDING THE CORNERS. After the mounting holes are drilled, round all four corners of the door (A) and the back plate (B) to a ½" radius (once again use a 25¢ piece as a template).

ROMAN OGEE. Once the corners are rounded, the final step is to rout the front edges of both the door and the back plate. I used a 5/32" Roman ogee bit mounted on the router table.

Feed the work into the rotation of the bit (from right to left — counter-clockwise). I cut this profile in three passes, raising the bit slightly with each pass. On the final pass raise the bit just a slight amount — this is a clean-up pass to remove any burn marks and get a nice crisp edge with a 1/16"-deep shoulder, see Fig. 7.

FIGURE 1

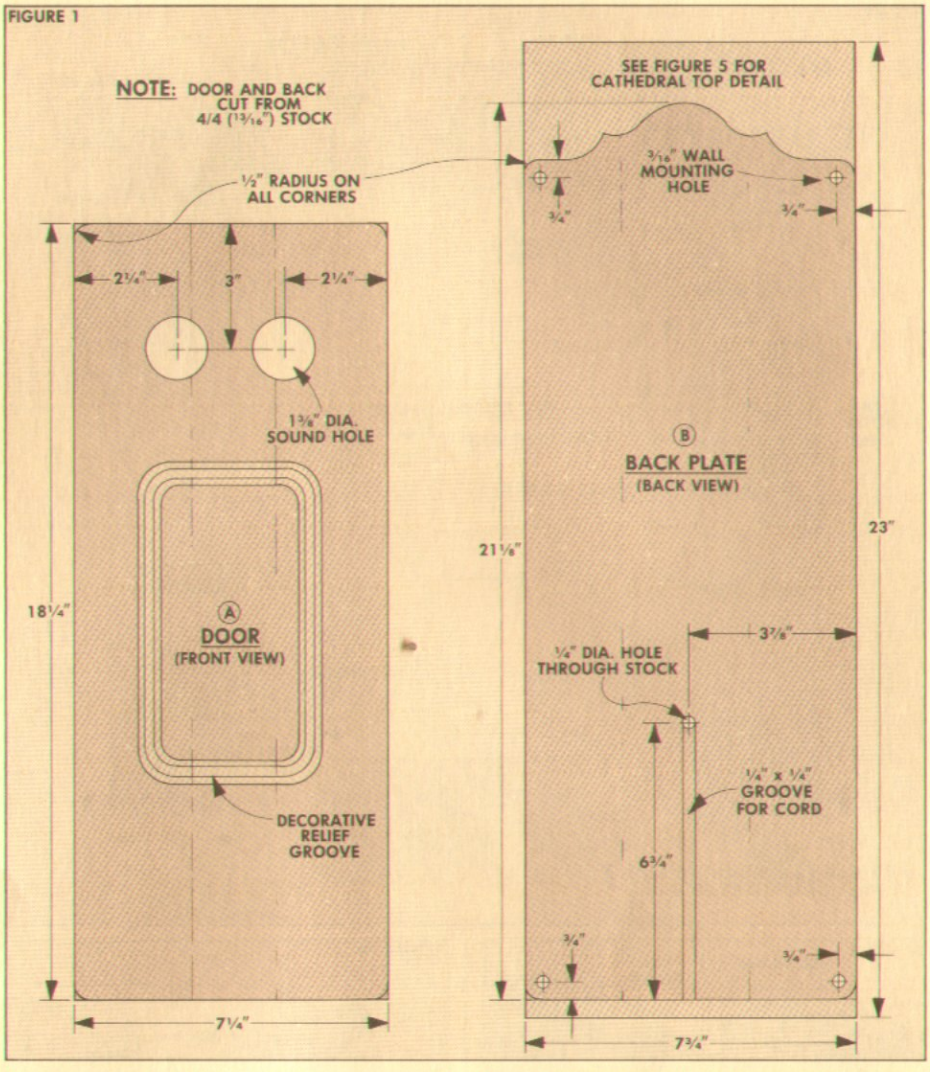

FIGURE 2

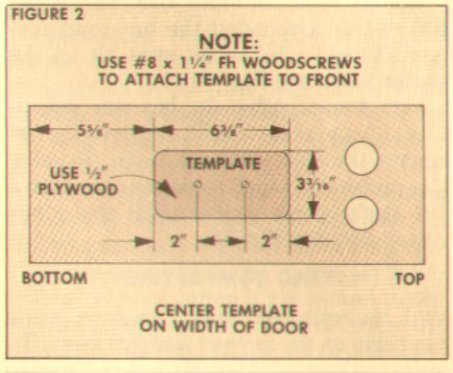

FIGURE 3

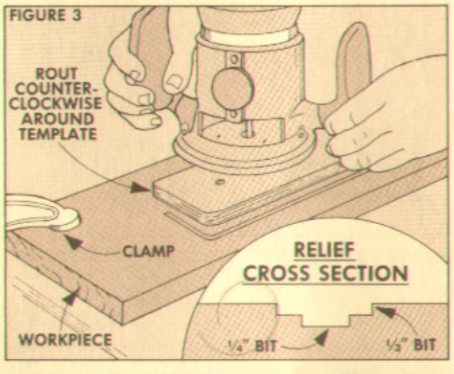

FIGURE 4

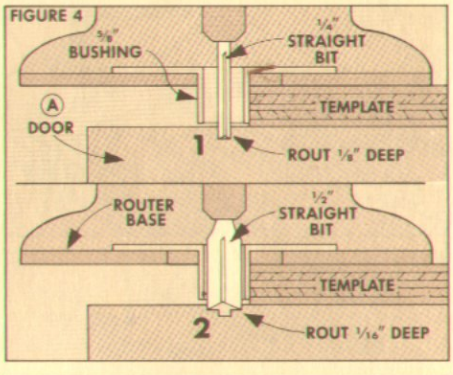

FIGURE 5

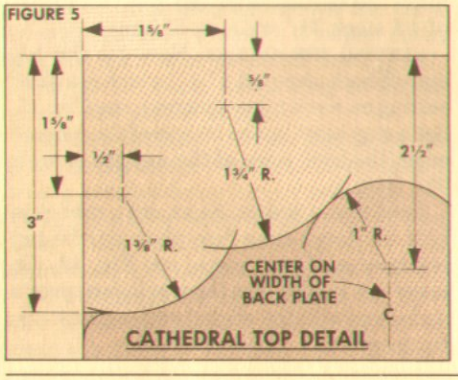

FIGURE 6

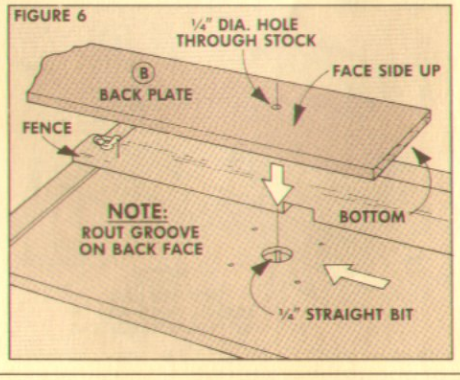

FIGURE 7

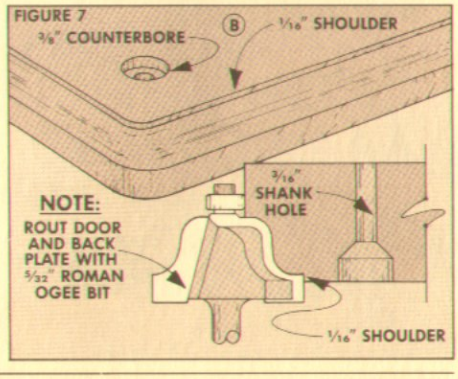

FIGURE 8

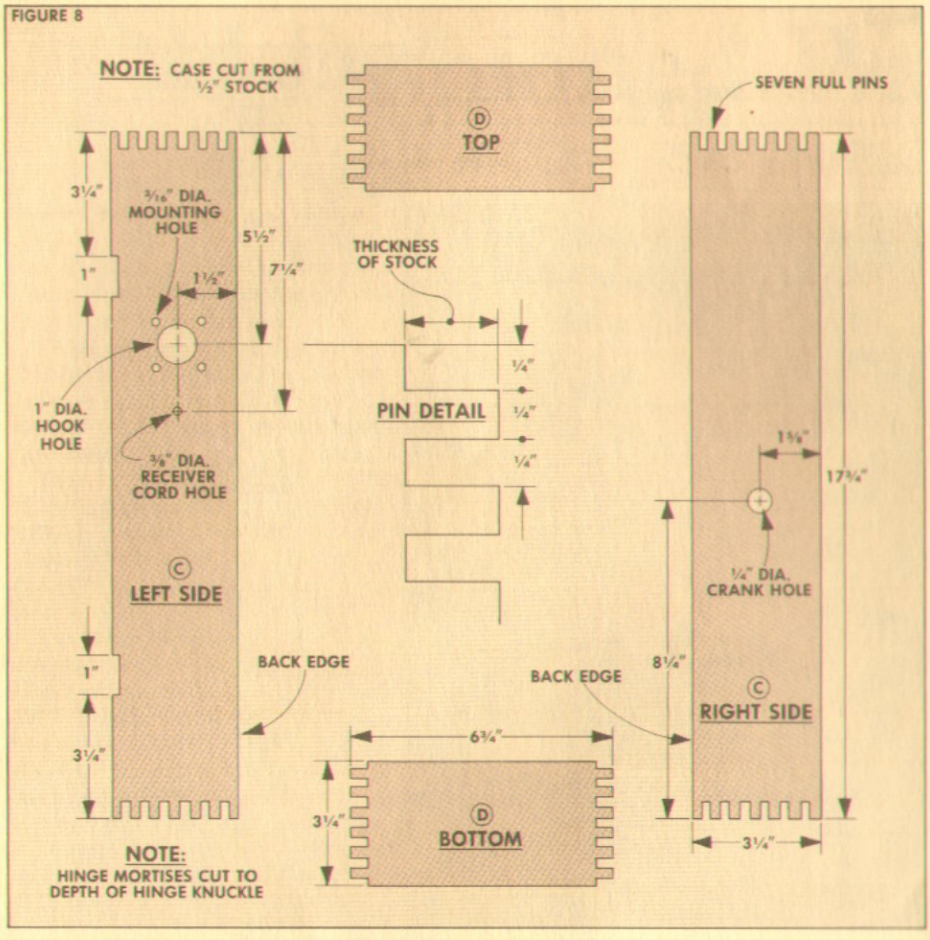

FIGURE 9

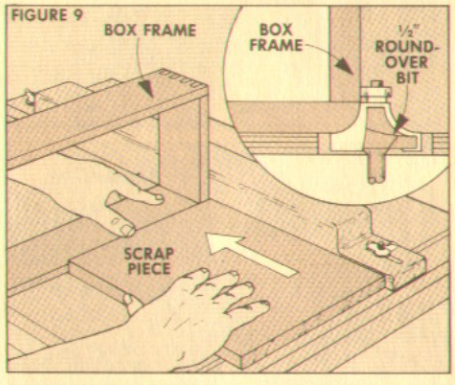

FIGURE 10

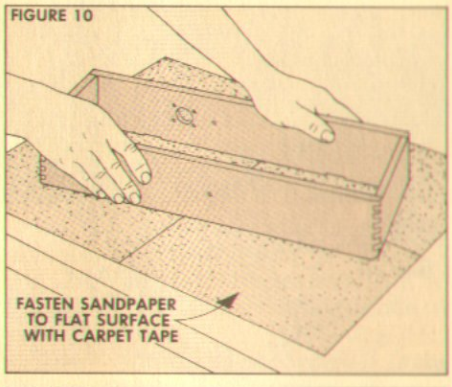

FIGURE 11

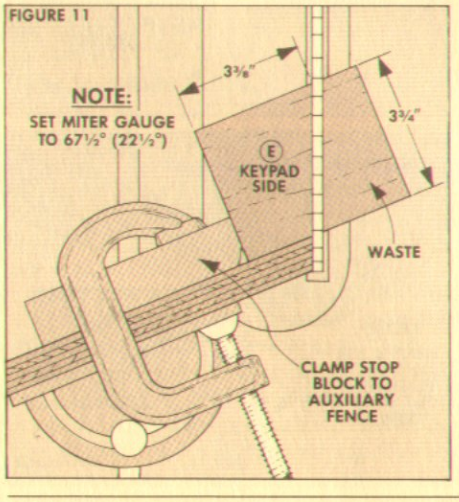

FIGURE 12

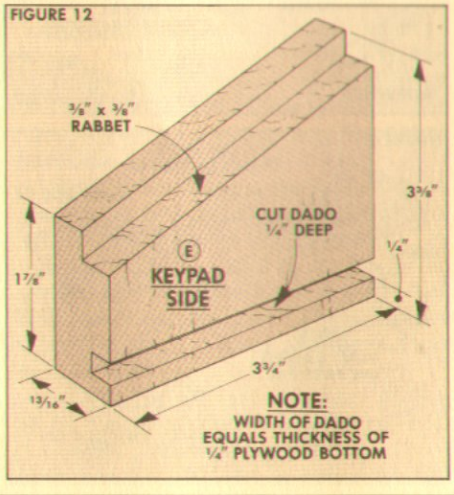

THE BOX FRAME

After the door and back plate were complete, I built the main box frame out of four pieces of ½"-thick stock joined at the corners with box joints.

CUTTING THE PIECES. Start by ripping the stock for the sides (C) and top/bottom (D) to a rough width of 3½". (These pieces are trimmed to final width *after* cutting the box joints.) Then cut the sides 17¾" long and the top/bottom 6¾" long, see Fig. 8.

BOX JOINTS. To join these pieces, I cut box joints on the router table using the jig shown on pg. 16. (See the article starting on pg. 18 for details on cutting box joints.)

After the joints are cut, trim the four pieces to final width. Use the side pieces as a guide, trimming them so there's a full pin on both edges. (The final width may vary in order to get seven pins with a full pin on the outside edges of the side pieces.)

HARDWARE HOLES. Before gluing the box frame together, lay out and drill the holes for the crank (on the right side) and the brass hook, escutcheon, and receiver cord (on the left side), see Fig. 8.

HINGE MORTISES. Next, cut two hinge mortises for the door hinges on the front edge of the left side. I cut these mortises on the table saw with the workpiece standing on edge against the miter gauge. (Note: The depth of these mortises should equal the *total* thickness of the hinges at the knuckle — that is, twice the usual depth of a hinge mortise.)

GLUE UP. After the mortises are cut, glue and clamp the box frame together. When it's dry, sand the joints so the ends of the pins are flush with the sides.

ROUND OVER CORNERS. Just like on the old phones, I rounded the box joint corners. I used a ½" round-over bit on the router table, see Fig. 9.

SAND EDGES. After the box was assembled, I found that it didn't sit perfectly flat against the door and back plate. To solve this problem, I taped some sandpaper to a flat surface and sanded until the edges rested flat, see Fig. 10.

KEYPAD COMPARTMENT

With the main box frame complete, work can begin on the keypad compartment. To make the keypad sides (E), cut two pieces of 4/4 stock 3¾" wide by 5" long.

CUTTING THE ANGLES. Now cut the top end off both pieces at 67½° (which is a 22½° setting on some miter gauges), see Fig. 11. Set a stop block so the length of the longest edge (the back edge of the keypad side) is 3⅜" long.

RABBET EACH SIDE. Next, cut a rabbet to hold the touch-tone face plate on the top inside edge of each piece, see Fig. 12. (To make this rabbet, run the workpiece over a dado head with the angled edge against the rip fence.)

Also cut a dado ¼″ up from the inside bottom edge for the ¼″ plywood bottom, see Fig. 12.

KEYPAD FRONT. After the sides are cut, they're joined to the keypad front (F). To make this piece, start by cutting a workpiece out of 4/4 stock 6″ long and to a rough width of 3″, see Fig. 13. Round the two front corners to ½″ radius and then rout the top edges with a 5/32″ Roman ogee bit leaving a 1/16″ shoulder.

Next, bevel rip (at 22½°) a piece off the front edge of this blank that's 2″ wide from the bottom edge to the point of the bevel, see Fig. 13.

BOTTOM. Now cut the bottom (G) for the keypad compartment from ¼″ plywood to a length of 4 9/16″ and to width to equal the width of the keypad sides, see Fig. 15.

FACE PLATE. To complete the keypad compartment, a veneer-covered plastic face plate (that comes in the hardware kit) is mounted in the rabbets, see Fig. 15. To determine the length of this face plate, dry-assemble the bottom to the sides.

Then measure the distance between the rabbets in the keypad sides. Mark this measurement on the plastic plate and cut it to size so the keypad holes are centered.

ASSEMBLY. To begin assembly, drill holes through each corner of the plastic face plate and temporarily screw it into the rabbets in the side pieces, see Fig. 15. Then put a little glue at the front end of the bottom slot and slip the bottom into place.

Now glue and clamp the keypad front (F) onto the front edges of the keypad sides (E). Keep the top edge of the front flush with the top edge of the sides and allow a uniform overhang on both sides of the compartment, see Fig. 15.

KEYPAD LID. When the glue is dry, the keypad lid (H) can be made. Edge glue three pieces of 4/4 stock together and cut the blank to a rough width of 7″ wide by 6¾″ long. Then cut two 1⅝″ radius arcs at the back corners, see Fig. 16.

After sanding the arcs smooth, rout a 5/32″ Roman ogee with a 1/16″ shoulder on the front and side edges of this workpiece. Then the lid can be bevel ripped (at 22½°) to final width so when it's mounted to the keypad compartment, it overhangs the front 3/16″, see Fig. 17.

PAPER CATCH. To complete the lid, cut a ⅛″-wide groove to mount a paper catch near the front edge of the lid, see Fig. 17. Then cut the paper catch strip to fit the groove and glue it in place.

HINGE MORTISES. The last step on the lid is to cut the hinge mortises. To do this, I built a beveled fence for my miter gauge. First, rip a 22½° bevel on one edge of two 2x4s. Then nail the 2x4s together and screw them to the miter gauge, see Fig. 19.

Now hold the lid tight against the beveled fence and make repeated passes to clean out the two mortises, see Fig. 18.

FIGURE 13

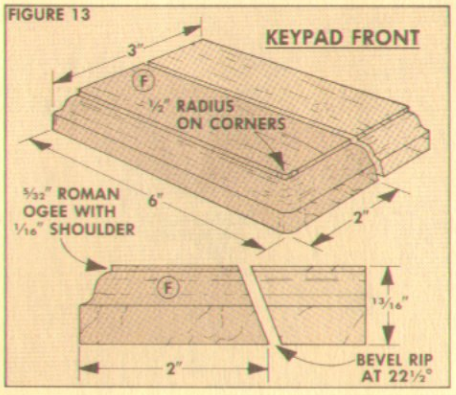

FIGURE 14

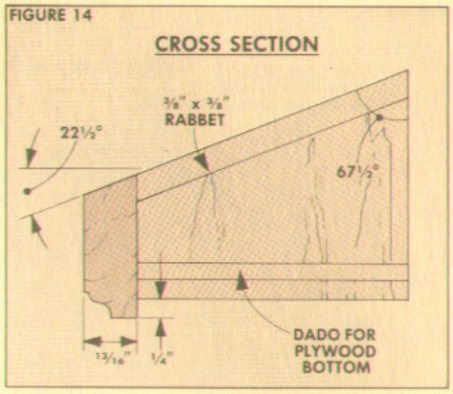

FIGURE 15

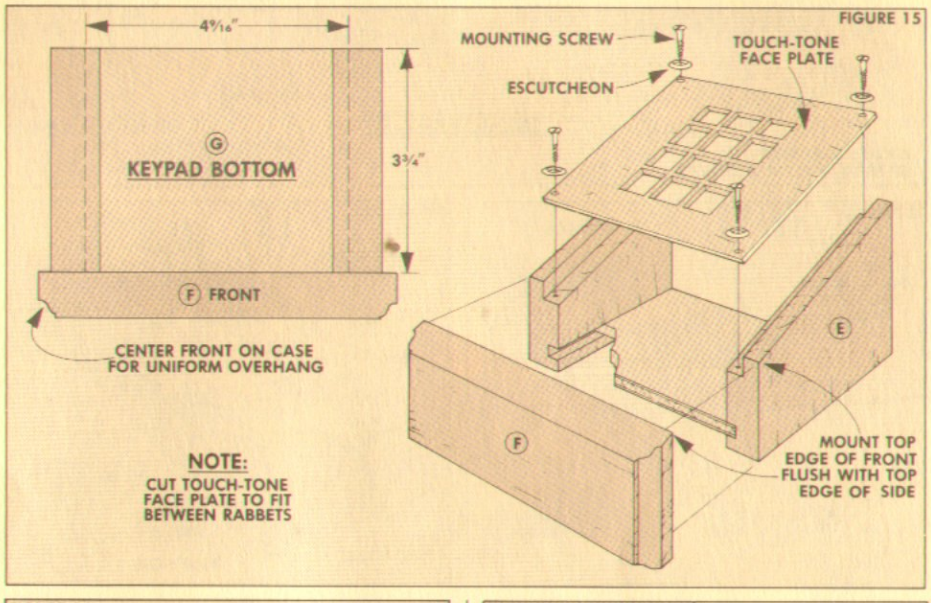

FIGURE 16

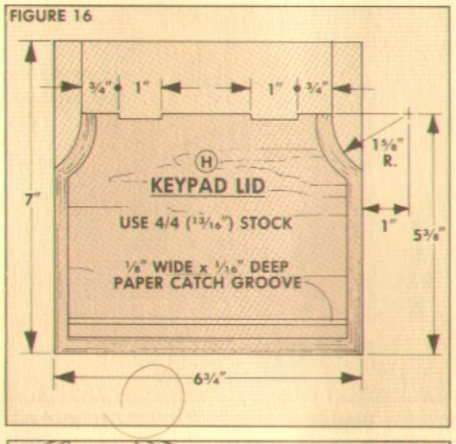

FIGURE 17

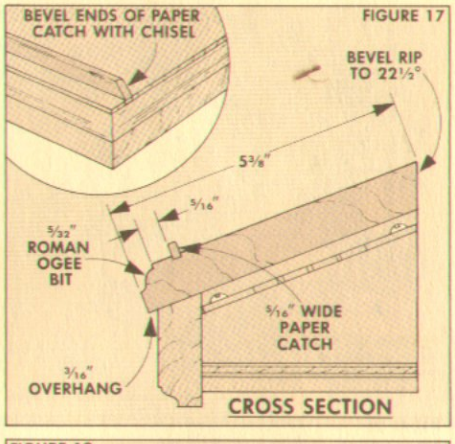

FIGURE 18

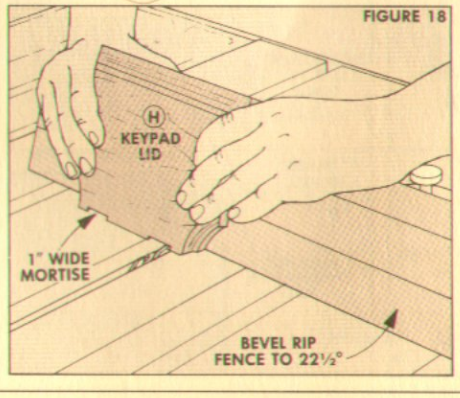

FIGURE 19

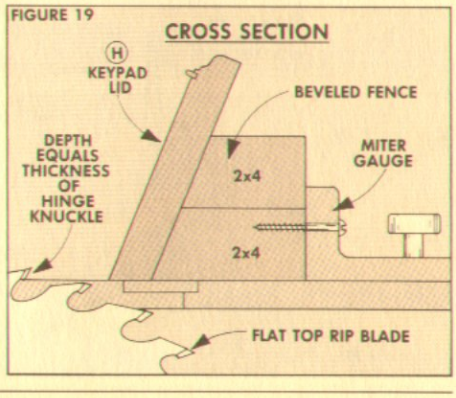

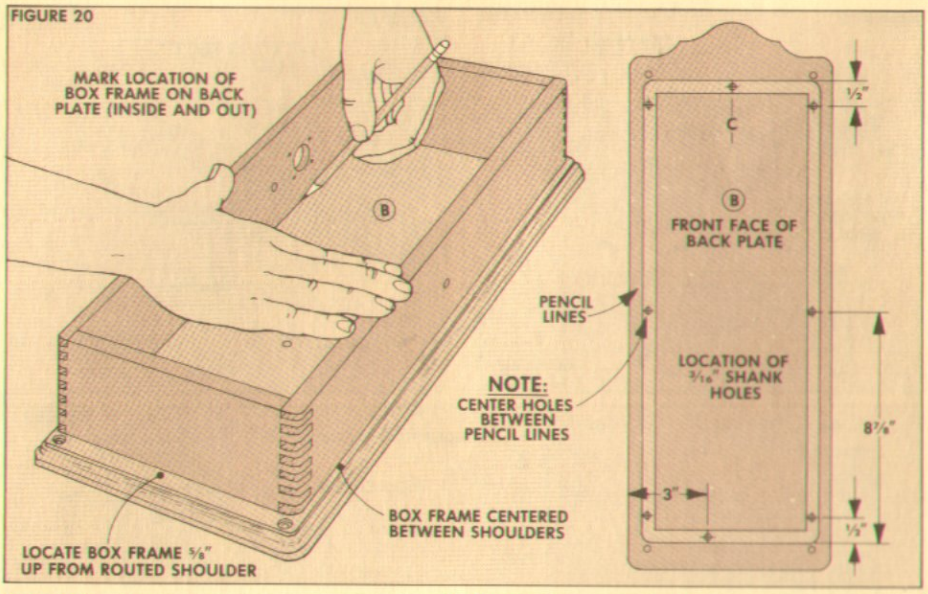

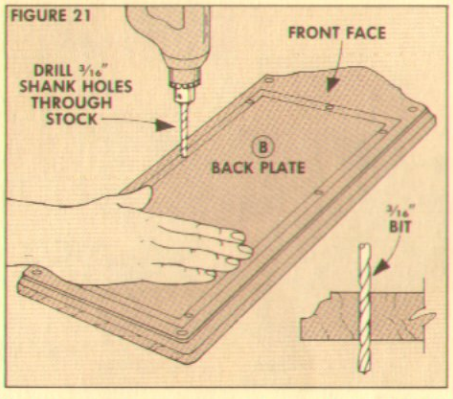

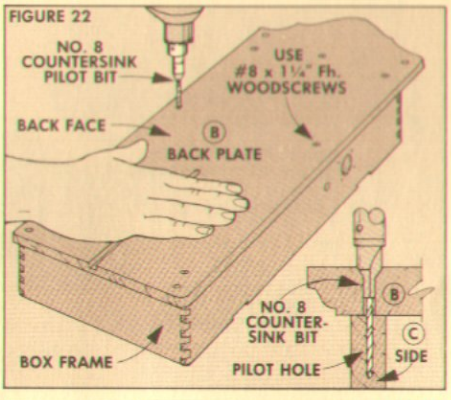

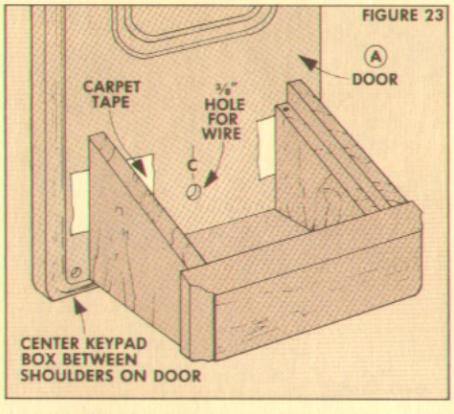

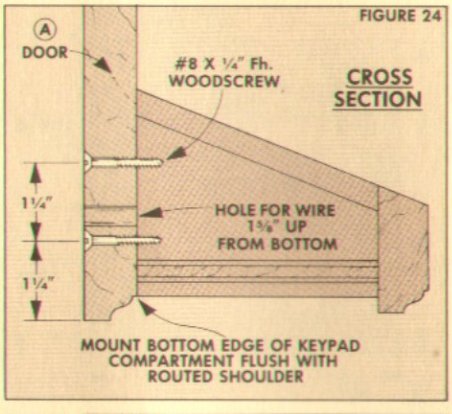

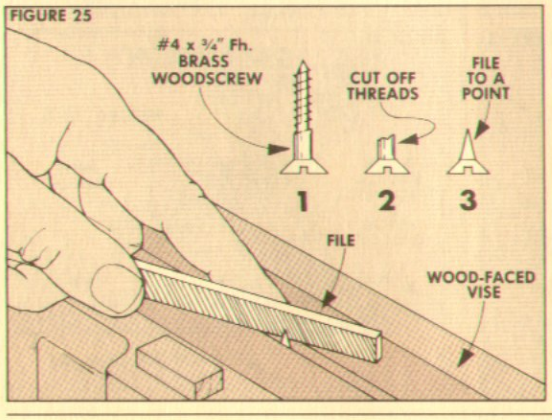

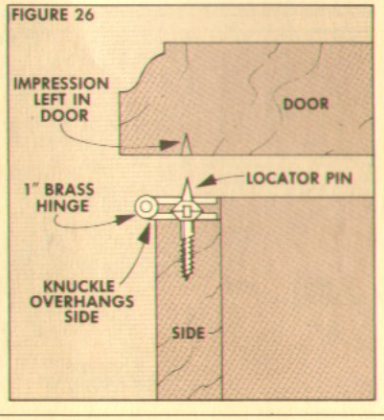

ASSEMBLY

After all the pieces for the keypad compartment are complete, final assembly can begin. I started by attaching the back plate (B) to the main box frame.

MARK POSITION. Position the box frame on the back plate so it's centered between the shoulders (of the Roman ogee) on the sides and ⅝" up from the shoulder on the bottom, see Fig. 20. Once the box is positioned, mark the outline of the frame.

SHANK HOLES. Now locate eight holes centered between the two pencil lines on the back plate (refer to Fig. 20), and drill a 3/16" shank hole at each point, see Fig. 21.

CARPET TAPE. After the shank holes were drilled, I tried to figure out a way to temporarily hold the box to the back plate in order to drill the pilot holes. After fumbling around with clamps, I finally came upon the idea of using double-sided carpet tape. (See Sources, pg. 24.)

Place patches of carpet tape over the pencil lines (don't cover the corners). Then place the box frame into position, using the corner marks to align it.

PILOT AND COUNTERSINK. Once the box frame is in the correct location, flip the assembly over so the back is up and drill through the eight shank holes with a No. 8 countersink/pilot bit, see Fig. 22.

After the holes are drilled, pull off the box, remove the tape, and then screw (but don't glue) the box to the back plate.

KEYPAD CASE TO FRONT. I used the carpet tape trick to locate the holes and mount the keypad compartment to the door. It's centered on the door and flush with the routed shoulder on the bottom end, see Fig. 23 and 24.

HOLE FOR WIRES. However, before mounting the keypad compartment, drill a ⅜" hole in the door for the wires that run from the touch-tone pad to the network circuit board inside the box, see Fig. 23.

FINISH. Before going any further, I finished all the wooden parts of the phone with two coats of Minwax Early American stain and followed with two coats of polyurethane, rubbing to a satin sheen.

THE HINGES

Now the door can be mounted to the box with 1" hinges, refer to Fig. 28. After screwing one leaf of each hinge into one of the mortises in the side of the box, the trick is to locate and screw the other leaves to the back of the door. I did this by making my own locator pins.

To make these pins, cut the threads off four No. 4 x ¾" flat-head brass screws, and file sharp points on the shanks, see Fig. 25. To use them, place one pin in each of the holes in the hinges and close the hinge leaves, see Fig. 26.

Next, center the door (A) over the box frame and press down on the door so the

locator pins leave an impression on the back of the door. Then drill pilot holes at these points for the hinge screws.

DOOR SCREW. The other edge of the door is held to the box with a screw and escutcheon washer. Center a counterbored hole for this hardware on the length of the picture frame relief groove and halfway between the groove and the shoulder of the Roman ogee, refer to Fig. 28. (Note: The screw goes into a small block that's glued inside the box, see Detail in Fig. 28.)

KEYPAD LID HINGES. The keypad lid (H) is mounted with the same procedure used on the door. Screw one leaf of each hinge into the keypad lid. Then locate it on the door using the locator pins.

Before attaching the lid, glue the touch-tone pad to the back of the face plate with Super Glue and screw this assembly into the keypad compartment.

PHONE MECHANISM AND HARDWARE

Before final assembly, I mounted all the phone hardware. First, mount the ringer and network circuit board inside near the bottom of the box (the position isn't critical), see Fig. 27.

MOUNTING THE HARDWARE. Next, mount the bell brackets and clapper cover on the outside of the door near the top, see Fig. 28. Each bell bracket is centered over a sound hole, and the clapper cover is centered between the two sound holes.

Then mount the transmitter arm assembly (mouthpiece) so it's centered inside the picture frame relief groove on the door. (Note: Before it's mounted, drill a ¼"-dia. hole for the wires that go to the network circuit board, see Fig. 28.)

Finally, fasten the receiver hook and the crank to the sides, see Fig. 27 and 28.

WIRING. Wiring the phone is easier than it looks. First, feed the receiver and jack cords through the holes in the box and tie knots on the inside to keep them from pulling out. Then to anchor the receiver wires, screw the terminals on the ends of the wires to the back plate, see Fig. 27.

Next, mount the door to the box. And finally attach all the wires to the network circuit board according to the instructions that come with the kit.

FASTEN TO WALL. To mount the phone to the wall, I used butterfly toggles and painted the screw heads with flat black enamel, see Fig. 29.

FIGURE 27

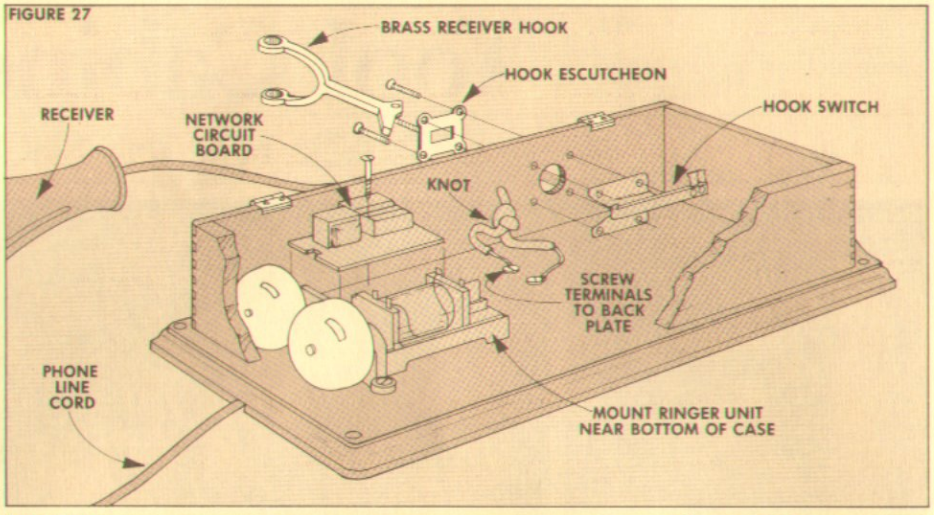

FIGURE 28

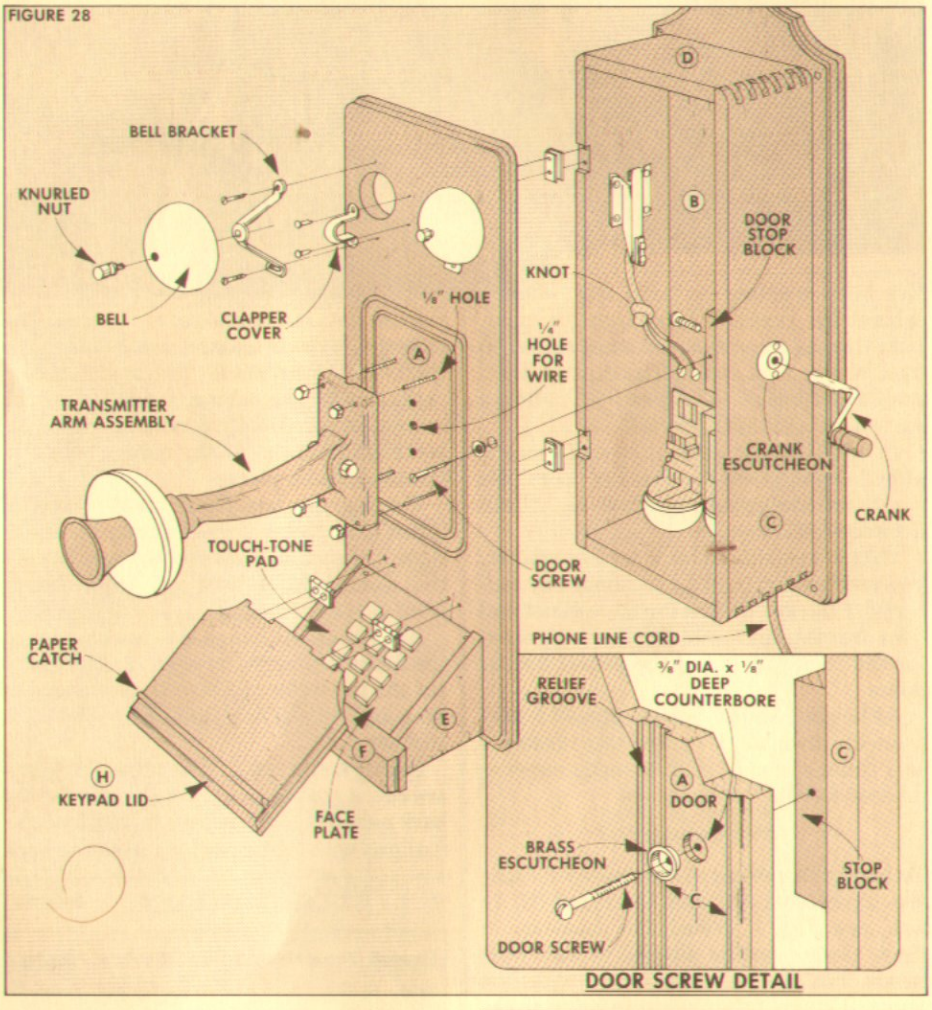

MATERIALS LIST

A	Door (1)	13/16 x 7¼ - 18¼
B	Back Plate (1)	13/16 x 7¾ - 21⅛
C	Sides (2)	½ x 3¼ - 17¾
D	Top/Bottom (2)	½ x 3¼ - 6¾
E	Keypad Sides (2)	13/16 x 3¾ - 3⅜
F	Keypad Front (1)	13/16 x 2 - 6
G	Keypad Bottom (1)	¼" plywood cut to fit
H	Keypad Lid (1)	13/16 x 5⅜ - 6¾

CUTTING DIAGRAM

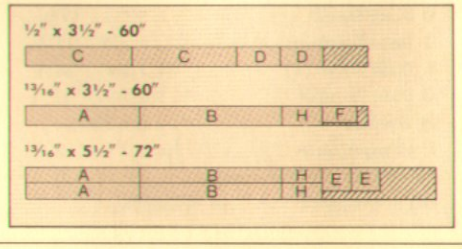

FIGURE 29

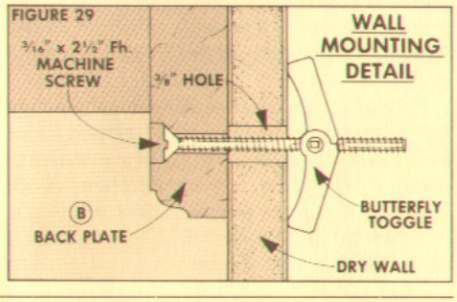

Tool Cabinet

STORAGE FOR THE SHOP

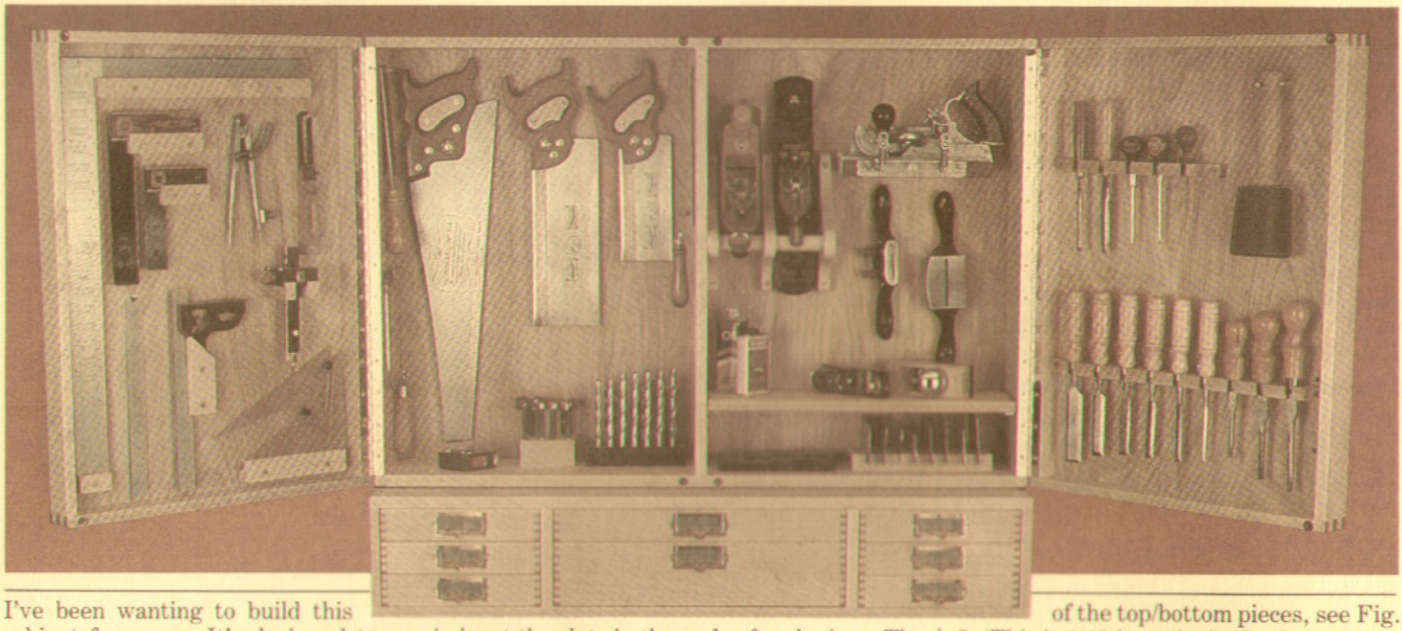

I've been wanting to build this cabinet for years. It's designed to maximize the one thing that's in short supply in most shops: wall space. The cabinet has a usable depth of 6" — deep enough to hold a variety of hand and power tools.

In addition, the amount of wall space is effectively doubled because the doors also serve as storage compartments. (Both doors are 1¾" deep.)

MATERIALS. Since this is a shop cabinet, you can build it out of just about any material. I chose 4/4 birch for the cabinet and door frames, and used ¾" birch plywood for the back panels and the panels for the doors.

Although using ¾"-thick plywood may seem like overkill, I wanted this thickness so I could screw in custom-made hanging devices for the various tools.

THE CABINET

To build the cabinet, I started by cutting the top/bottom (A) and the sides (B) to size, see Fig. 1. Note: The final size of these pieces can be altered to suit your needs, but since they're joined with box joints, it's nice if they're cut to width so the joints come out even (with a full pin on the front and back edges), see Box Joint Detail in Fig. 1.

However, just in case there's a little gain when the box joints are cut, I ripped these four pieces a little wide to begin with (to about 7¾"). Then I trimmed them down after the box joint pins and slots were cut.

When all the pieces were cut to size, I used the box joint jig shown on page 16 to cut the slots in the ends of each piece. The slots are ½" wide and the depth equals the thickness of the stock (13/16" in my case).

Start with the cabinet's side pieces (B) and cut seven slots (to produce eight pins), see Fig. 1. Then cut the mating joints in the top/bottom pieces.

Cutting the box joints on the ends of these long pieces turned out to be easier than I expected. However, to help steady the workpieces I used a 7"-high sliding front fence on the jig.

Shop Note: Although the construction of the doors is covered on page 12, it's best to cut the pieces for the door frames ahead of time and cut the box joints while the jig is still set up.

GROOVE FOR BACK. After the box joints are cut, a groove is cut in each piece for the back panel (D). This groove is positioned so it aligns with the second pin from the back of the top/bottom pieces, see Fig. 2. (This is 1½" from the back edge to allow for the ¾"-thick back and ¾" for the cabinet's hanging system.)

Set up the saw to cut a kerf ⅜" deep right next to the edge of the second pin. Make this cut on all four pieces before moving the fence to widen the slot to ¼".

DADO FOR DIVIDER. Next, ¼"-wide dadoes are cut centered on the length of the top/bottom pieces for the center divider (C), see Fig. 3.

To make sure these dadoes are aligned on both pieces, clamp them together, back edge to back edge. (Refer to Fig. 2, pg. 13.) Then clamp a fence across both pieces and use a router to rout the dado so it starts ⅜" from the front edge of each piece and stops in the groove for the back panel, see Fig. 3.

DIVIDER. After these dadoes are cut, the center divider (C) can be cut to size. Cut the divider to width to equal the distance

MATERIALS LIST

Overall Dimensions: 10"d x 28⅛"h x 42⅛"w

A Top/Bottom (2)	13/16 x 7½ - 42⅛
B Sides (2)	13/16 x 7½ - 28⅛
C Center Divider (1)	13/16 x 6 - 27¼
D Back Panel* (1)	¾ x 27¼ - 41¼
E Door Top/Bottom* (4)	13/16 x 2½ - 21 1/16
F Door Sides (4)	13/16 x 2½ - 28⅛
G Door Panels* (2)	¾ x 20 9/16 - 27¼
H Shelves*	¾ x 6 - 19½
I Hanger Strip (2)	13/16 x 2 - 41½

* Cut from ¾" Plywood

All other pieces cut from 4/4 stock

CUTTING DIAGRAM

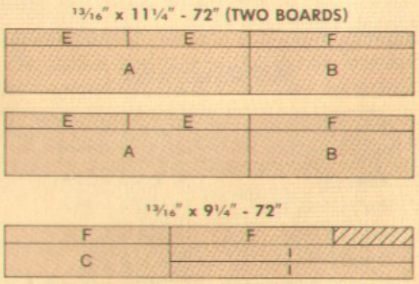

ALSO REQUIRES ¾" PLYWOOD 48" x 96"

from the front edge of the top/bottom pieces to the front edge of the groove for the back panel, see Fig. 3.

To get the length, measure the shoulder-to-shoulder distance on the side pieces. (This is the distance between the bottoms of the box joint slots on the side pieces.) Then add ¾" for the two ⅜"-long tongues on the ends.

After the divider is cut to size, cut tongues centered on the ends to fit the dadoes in the top/bottom pieces.

BACK PANEL. The last piece needed for the cabinet is the back panel (D). As mentioned above, I made this panel out of ¾" birch plywood. To determine the size of the panel, measure the shoulder-to-shoulder distance on the sides and the top/bottom pieces, and add ¾" to both dimensions for the ⅜"-long tongues on the edges.

Then cut ⅜"-wide by ½"-deep rabbets on the back face of all four edges of the panel to produce ⅜"-long bare-faced tongues that fit the grooves in the frame pieces.

HOLES FOR SHELVES. Before final assembly, I drilled a series of ¼"-dia. holes in the sides and the middle divider for shelf support pins, see Fig. 4. The position of these holes is optional, I just started with a set of holes centered on the height of the side piece. Then I added holes centered every 3" up and down, see Fig. 4.

ASSEMBLY. Now the cabinet can be assembled. It takes a little time to apply glue to all the joints, so you may want to enlist a helper. After the glue is applied, clamp the cabinet together with the back and center divider in place. (The back panel will help pull the frame square, but check to make sure.)

HANGING SYSTEM. To mount the cabinet to the wall, I used beveled hanging strips, see Fig. 5. Just cut two beveled strips and mount one strip to the wall (make sure you hit studs), and the other to the cabinet.

SHELVES. Some of the left-over birch plywood can be used to make a few shelves. Although it's not necessary, I dressed up the edges by adding birch edging strips, see Fig. 6.

CHAMFER EDGES. The last step on the shelves and the cabinet is to lightly chamfer the edges. I did this with a 45° chamfer bit, chamfering all inside and outside edges of the cabinet.

FIGURE 1

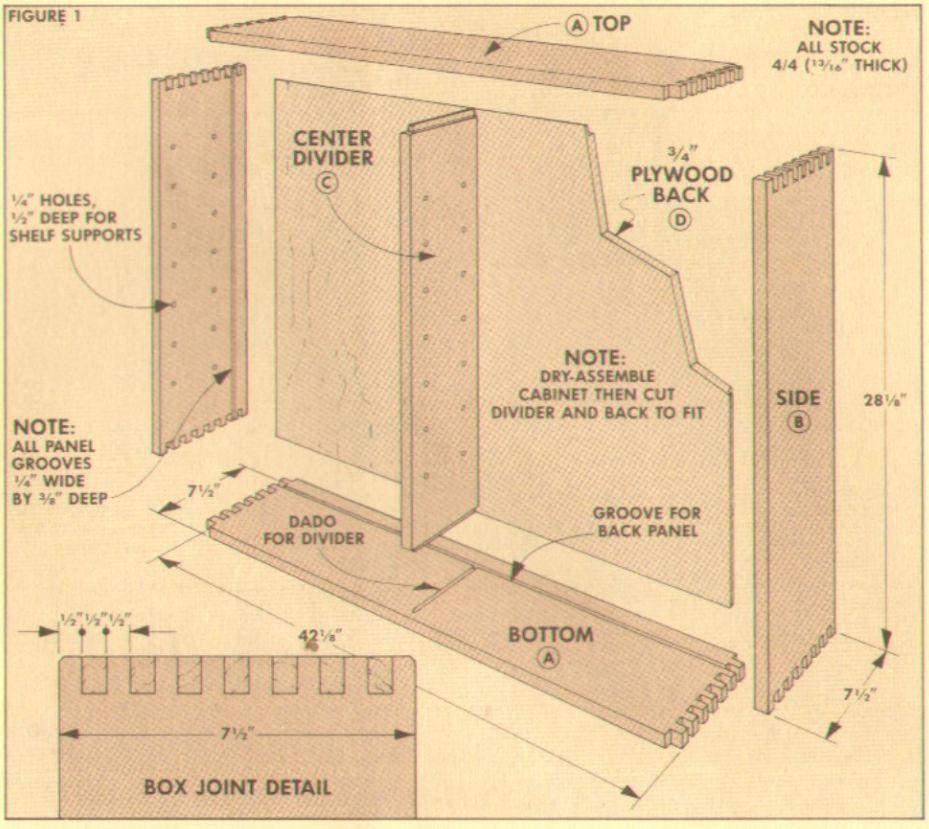

FIGURE 2

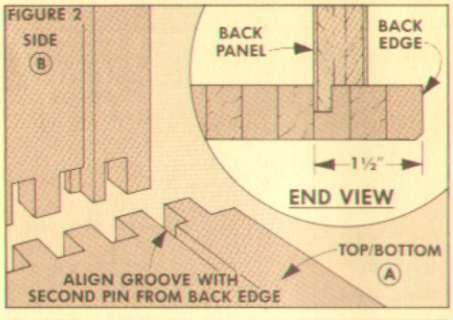

FIGURE 3

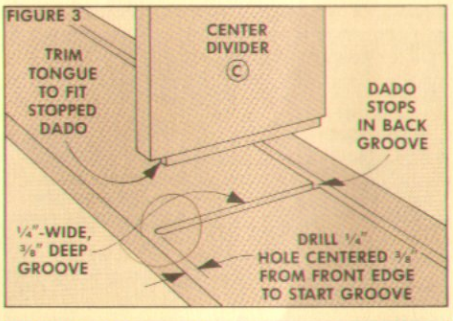

FIGURE 4

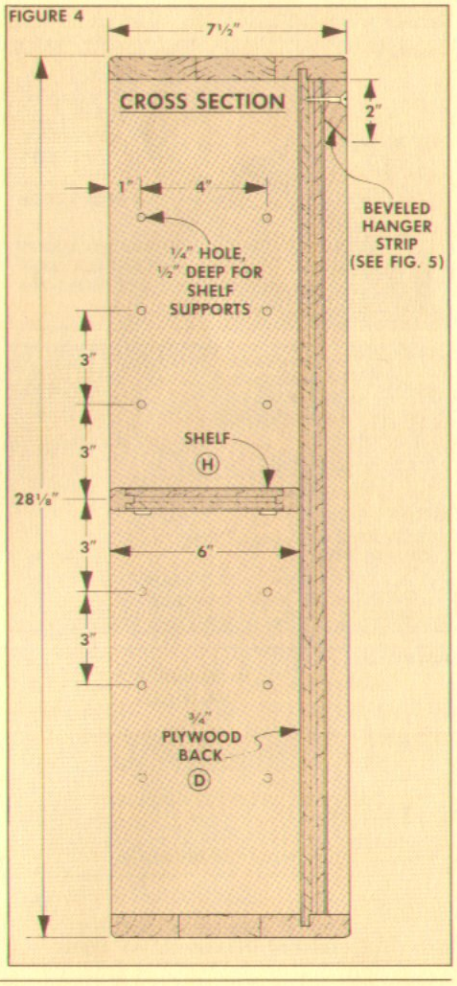

FIGURE 5

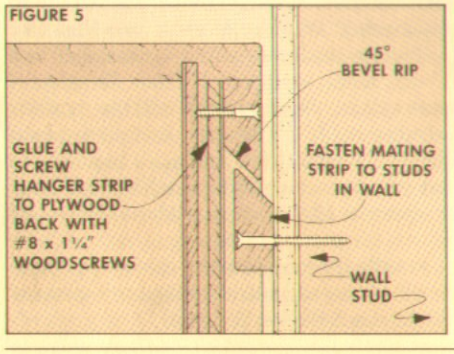

FIGURE 6

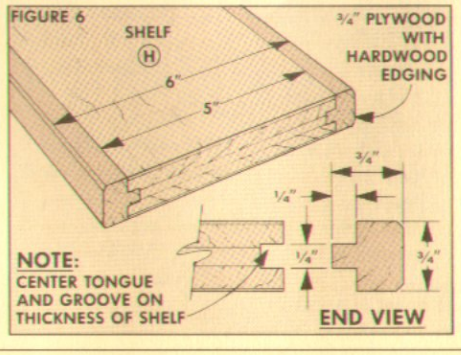

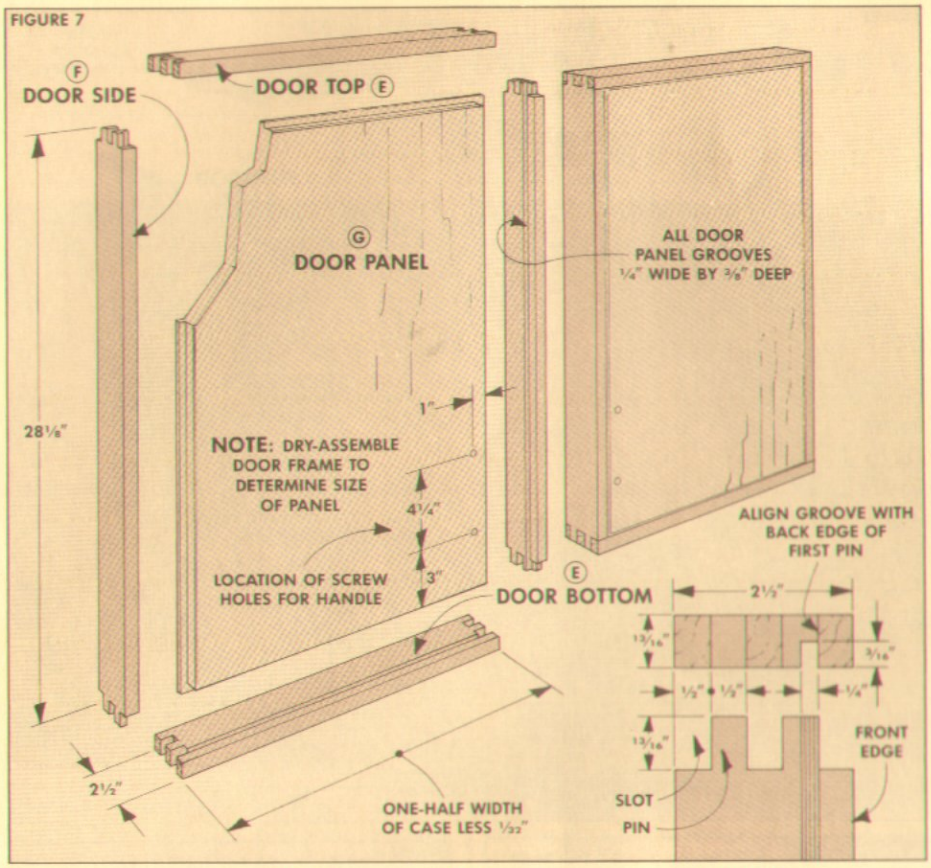

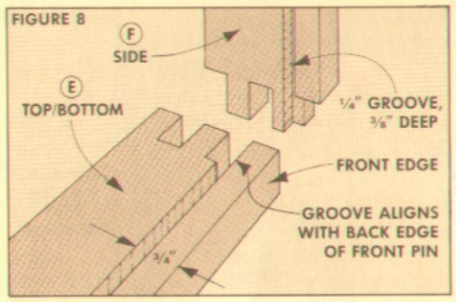

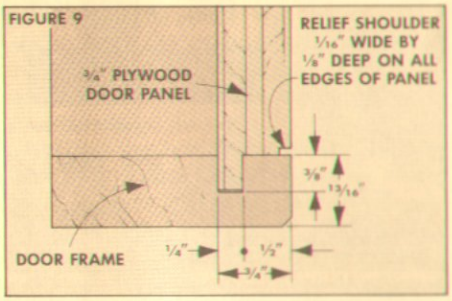

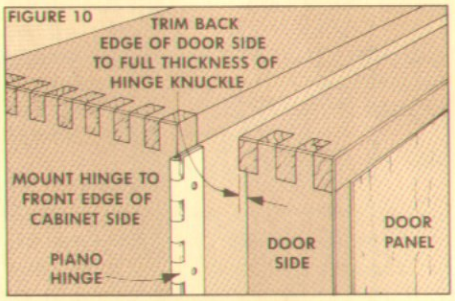

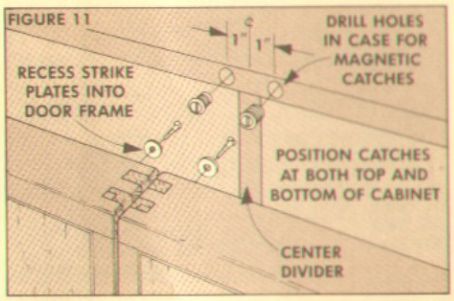

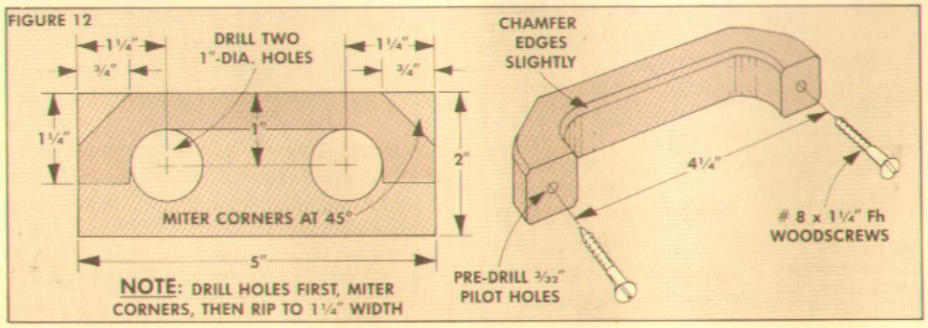

THE DOORS

The doors are constructed the same way as the cabinet. Begin by cutting the top/bottom pieces (E) and side pieces (F) to size, see Fig. 7. As with the cabinet pieces, the door pieces are cut a little wide to begin with, and trimmed to final width after the box joints are cut.

The length of the door's sides (F) should be exactly the same as the cabinet sides (B). The combined length of both top/bottom pieces (E) should equal the length of the cabinet's top/bottom piece (A), less 1/16" (1/32" on each piece) to allow for clearance between the doors.

JOINERY. As mentioned previously, it's best to cut the box joints on the door pieces at the same time as the cabinet pieces. Start these cuts with the top/bottom pieces, cutting two slots and leaving three pins, see Fig. 8.

GROOVE FOR DOOR PANEL. After the box joints are cut, cut a groove along the inside edge of each piece for the door panels (G). This groove is ¼" wide by ⅜" deep and positioned so it's front edge is lined up on the back edge of the first pin on the top/bottom pieces, see Fig. 8.

DOOR PANELS. Now cut the door panels from ¾" birch plywood to fit between the bottoms of the grooves in the door frame. Then cut rabbets on the face side of each panel to produce tongues to fit the grooves. I also cut a 1/16"-wide relief shoulder on each rabbeted edge to outline the panel in the frame, see Fig. 9.

HINGE MORTISE. Before final assembly, I ripped the back edge of the two *outer* door sides down to produce a mortise for the continuous hinges used to mount the doors, see Fig. 10. Set the saw to rip off a width equal to the total thickness of the hinge (at the knuckles).

ASSEMBLY. Now glue and clamp the door frames together with the panels in place. When the glue is dry, mount the doors to the cabinet with continuous hinges, see Fig. 10.

CATCHES. To hold the doors closed, I added magnetic catches at the top and the bottom inside corners, see Fig. 11.

HANDLES. At first I was going to buy brass handles for the doors. But then I decided to have a little fun and make my own handles. I started with two blanks of 4/4 birch 2" wide by 5" long, see Fig. 12.

To form the inside of the handle, drill two 1"-dia. holes, centered 1" from the edge of each piece. Next, miter off the outside corners at 45°. Then rip the pieces to a finished width of 1¼" and use a bandsaw to cut out the inside shape, see Fig. 12. Finally, chamfer all the edges with a 45° chamfer bit on the router table.

FINISH. To complete the cabinet, I chamfered all the edges and applied two coats of Sutherland Welles Tung Oil.

Drawer Unit

As soon as the cabinet was done, I decided to add a drawer unit below it. This is a basic frame (much like the cabinet) that's joined with box joints.

TOP/BOTTOM PIECES. The top/bottom pieces (J) are cut to width to match the combined depth of the cabinet and the doors. This should be 10", see Fig. 1. Then cut these two pieces to length to match the length of the cabinet's top/bottom pieces.

ENDS AND DIVIDERS. The two ends (K) and two dividers (L) are ripped to the same width as the top/bottom pieces. As for the length, it depends on how many drawers you want and how they're constructed.

Since I wanted to construct these drawers with box joints, I had to plan ahead a little. I planned the height of the drawers to be an even multiple of the box joint's ¼"-wide pins and slots. (Each drawer is 2" in this case, see Fig. 3.)

Then to determine the height of the opening in the drawer unit, I allowed 6" for three drawers, plus a total of ¼" for clearance (1/16" between the drawers and 1/16" at the top and bottom), see Fig. 3.

CUT TO LENGTH. After the height of the opening is determined, the end pieces (K) can be cut to length. The length of the end pieces is 6¼" plus the thickness of the top and bottom pieces (13/16" each), for a total of 7⅞". Note: This makes the end pieces a little odd because they're wider (10") than they are long (7⅞").

DIVIDERS. The length of the dividers (L) is equal to the height of the opening 6¼", plus ¾" for the two ⅜"-long tongues.

BOX JOINTS. After all these pieces are cut to size, the box joints can be cut to join the top/bottom pieces to the end pieces. I adjusted the box joint jig (see page 16) to cut the slots ½" wide. Then I started by cutting the top/bottom pieces so there would be a pin on the front edge, see Fig. 1.

DADOES FOR DIVIDERS. After the joints are cut, stopped dadoes are routed on the inside faces of the top/bottom pieces to mount the dividers.

To get the dadoes aligned, I clamped the top and bottom pieces together, back edge to back edge, see Fig. 2. Then I marked the centerline of the dadoes 10⅜" from each end (measuring from the bottom of the box joint slots).

Next, drill ¼"-dia. start/stop holes centered ⅜" from the front edges of the pieces, see Fig. 2. Clamp a fence across both workpieces and then place the router bit in the start hole and rout a ⅜"-deep dado to the stop hole.

TONGUES ON DIVIDERS. Finally, cut tongues centered on the thickness of the dividers to fit the stopped dadoes.

FIGURE 1

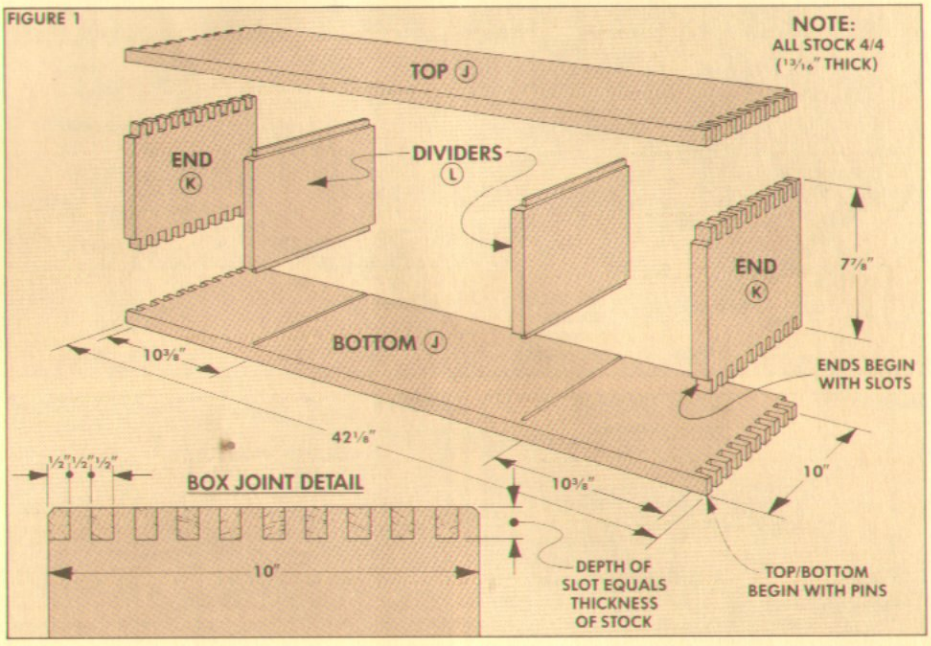

FIGURE 2

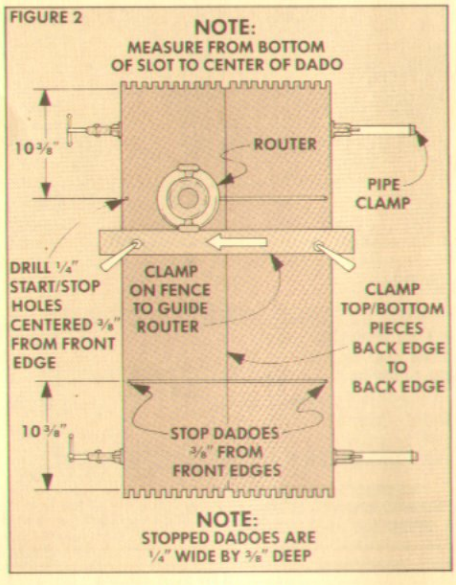

FIGURE 3

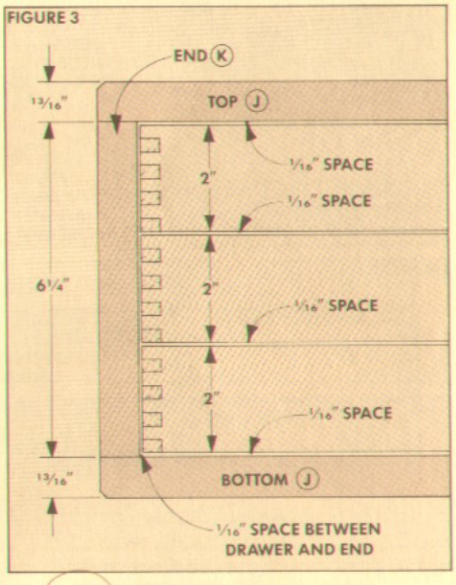

MATERIALS LIST

Overall Dimensions: 10"d x 7⅞"h x 42⅛"w

J Top/Bottom (2)	13/16 x 10 - 42⅛
K Ends (2)	13/16 x 10 - 7⅞
L Dividers (2)	13/16 x 10 - 7
M Drawer Runners (16)	7/32 x ½ - 9⅝
N Sm. Dwr. Frnt/Bk (12)	⅜ x 2 - 9⅞
P Sm. Dwr. Sides (12)	⅜ x 2 - 9⅞
Q Sm. Mid. Drw. Frnt/Bk (2)	⅜ x 2 - 18⅞
R Sm. Mid. Drw. Sides (2)	⅜ x 2 - 9⅞
S Lrg. Mid. Drw. Frnt/Bk (2)	⅜ x 4 1/16 - 18⅞
T Lrg. Mid. Drw. Sides (2)	⅜ x 4 1/16 - 9⅞
U Drawer Bottoms	cut to fit
V Drawer Dividers	cut to fit

CUTTING DIAGRAM

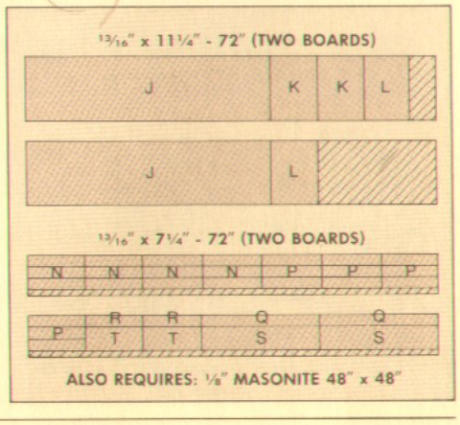

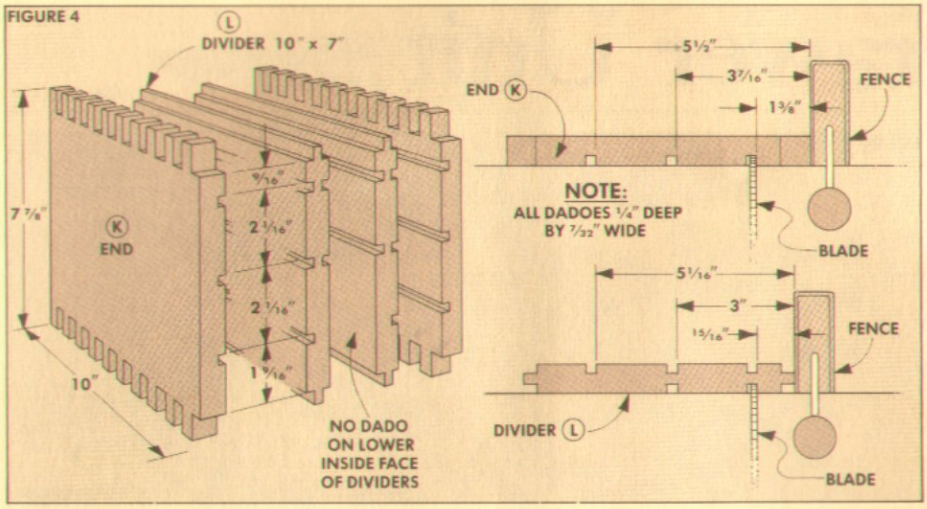

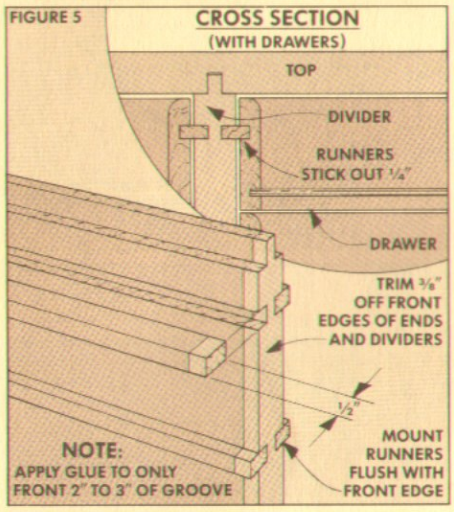

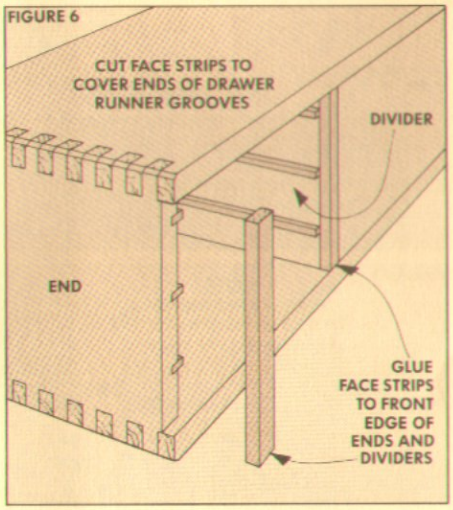

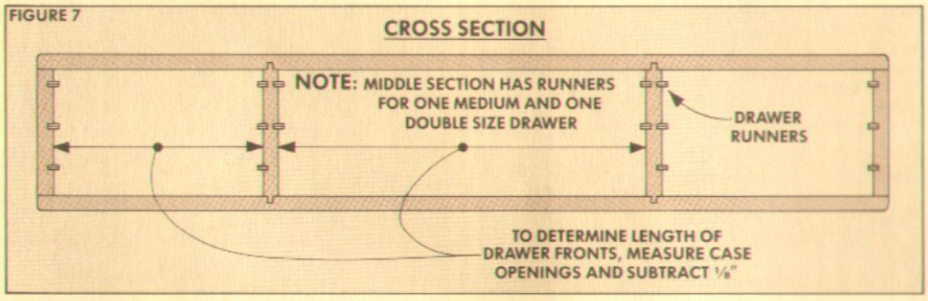

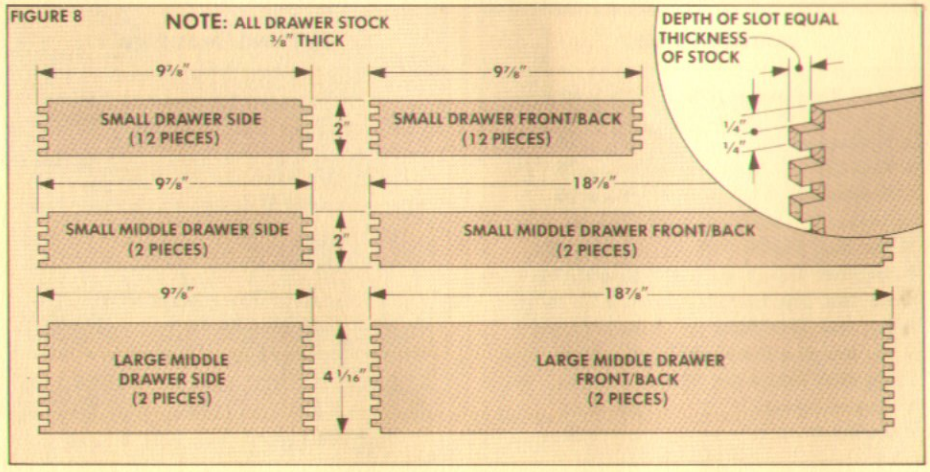

MOUNT RUNNERS

Before assembling the drawer unit, I cut dadoes to mount the drawer runners in the ends (K) and dividers (L). To position the top dado in the *end pieces*, set the distance between the fence and the saw blade to 9/16" plus the thickness of the top/bottom piece (13/16"), see Fig. 4.

POSITION OF DADOES. This position deserves some explanation. It's actually determined by the layout of the box joints on the drawers. But since the drawers aren't built yet, it takes a little planning ahead.

When the drawers are built, there will be a groove for the runner cut in the drawer's side piece. This groove aligns with the second slot down (of the box joint), see Fig. 9.

Since the drawers will be made with 1/4"-wide box joints, this puts the groove 1/2" down from the top edge. Add to this the amount of clearance allowed above the drawer (1/16") and you get the 9/16" spacing. Then add the thickness of the stock for the top/bottom (13/16") for a total of 1 3/8", see Fig. 4.

CUT GROOVES. So, set the fence of the saw 1 3/8" from the blade and cut a kerf on the inside face of the two end pieces (K). Then move the fence to widen the dado to 7/32". (I cut these dadoes for the drawer runners 1/32" less than 1/4" so the runners wouldn't bind in the 1/4"-wide groove on the drawer sides.)

REMAINING GROOVES. After the top dado is cut in both end pieces, adjust the fence to cut the remaining dadoes so they're spaced 3 7/16" and 5 1/2" from the top edge, see Fig. 4.

DADOES ON DIVIDERS. Next cut the corresponding dadoes on the dividers. This requires different settings because the tongue on the top edge of the dividers is only 3/8" long, see Fig. 4.

DRAWER RUNNERS. After the dadoes are cut on the end pieces and dividers, the runners (M) are cut to thickness so they fit in the dadoes, and to width so they stick out 1/4", see Fig. 5.

Since the runners are mounted *across the grain* of the end pieces and dividers, apply glue only to the front 2" or 3" when gluing them in place. (This is to allow the ends and dividers to expand/contract.)

TRIM FRONT EDGES. Finally, before assembling the drawer unit, I trimmed 3/8" off the front edges of the ends and dividers, see Fig. 5. Then later I added face strips to cover the ends of these pieces.

ASSEMBLY. Now glue and clamp the ends and dividers to the top and bottom pieces. (To get even clamping pressure on the dividers, I used the tip described in Tips & Techniques, see pg. 3.)

ADD FACE STRIPS. When the glue is dry, cut 3/8"-thick face strips and glue them to the front edges of the ends and dividers, see Fig. 6.

THE DRAWERS

Now that the drawer unit is assembled, the drawers can be built. I started by ripping enough stock for all the drawers to a width of 2" (except for the double-size drawer in the center compartment, which is 4 1/16" wide). Then all of these pieces are resawn to a thickness of 3/8".

FRONT/BACK PIECES. The drawer front/back pieces are cut to length to equal the width of the opening less 1/8" (1/16" on each side) for clearance, see Fig. 7.

SIDE PIECES. The length of the drawer's side pieces is somewhat optional. I cut them all to the same length as the length of the front/back pieces on the small drawers.

BOX JOINTS. The drawers are joined with 1/4"-wide box joints. (The technique for cutting the joints on these drawers is described in detail starting on page 18.)

After the box joints are cut, the grooves for the drawer bottom and the drawer runners are also cut. Then the drawer is assembled, see Fig. 9. (All of this is also discussed in the article on page 18.)

DIVIDER SYSTEM. On some of the drawers I added an interlocking divider system. (This is handy for storing screws, brads, and other small hardware.) Before cutting the stock for the dividers, I rounded over the inside top edge of the drawers, see Cross Section in Fig. 9.

The dividers (V) can be made from hardwood stock (left over from making the drawers) or from 1/8" Masonite. Either way, the dividers must be the same thickness as the width of the slot cut by the saw blade.

CUT TO SIZE. Cut the dividers to width (height) to equal the distance from the drawer bottom to where the round-over starts, see Detail in Fig 9. Then cut them to length to match the width and depth of the inside of the drawer.

CUT JOINTS. To make the interlocking joints, start by cutting a notch on each end, see Step 1 in Fig. 10. (Use the box joint jig to make these cuts, see page 16.) Then cut notches 2 7/8" from each end, see Step 2 in Fig. 10. After the joints are cut, it's just a matter of sliding the dividers together and placing them in the drawer.

MOUNT DRAWER UNIT. When the drawers were complete, I mounted the entire drawer unit to the bottom of the cabinet. (I added 1/8" Masonite spacers between the two units to allow clearance for the doors to swing open, see Fig. 11.)

Use a Portalign to drill 1/4" holes through the bottom of the cabinet, stopping when the bit just touches the top of the drawer unit. Then drill holes at these points for 1/4" inside dia. threaded inserts.

Mount threaded inserts in the holes in the drawer unit. Then fasten the cabinet and drawer unit together with 1/4" Fh machine screws.

FIGURE 9

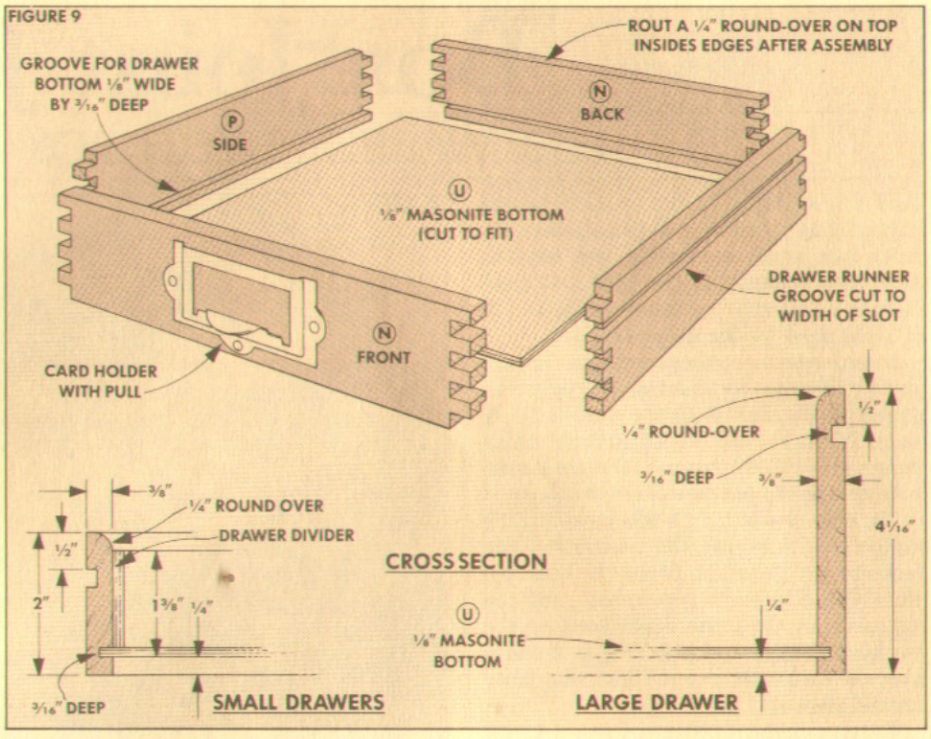

FIGURE 10

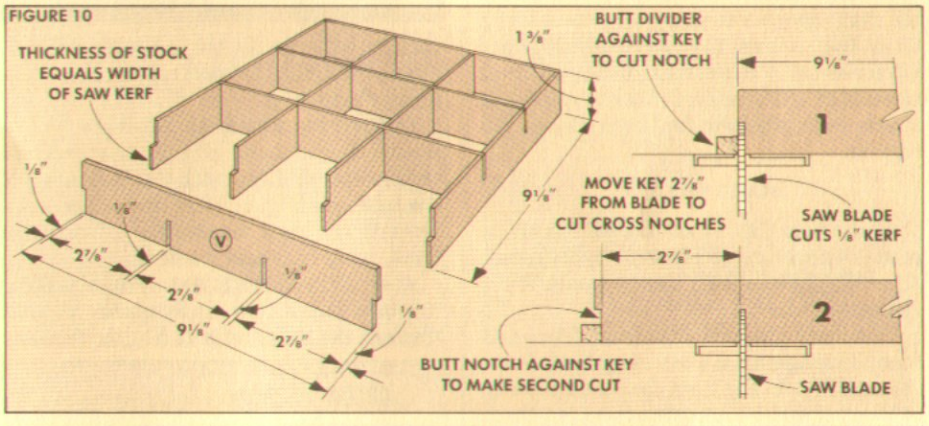

FIGURE 11

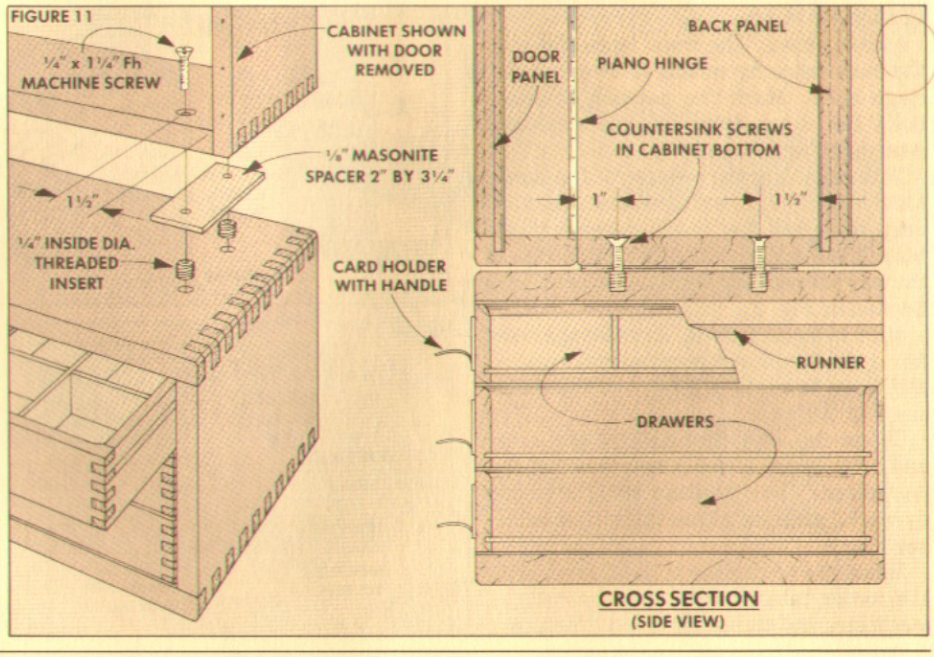

Box Joint Jig

THE WAY TO PERFECT BOX JOINTS

As I was working on the projects in this issue, I had to cut a lot of box joints. To make box joints accurately, you have to meet two criteria: 1) the pins and slots have to be exactly the same width, and 2) all slots must be the same depth.

In order to meet these criteria, I use a jig to guide the workpieces. The jig we've shown in *Woodsmith* in the past is fairly basic. It's just a fence attached to the miter gauge with an indexing key mounted to the bottom edge to position the workpiece.

The only problem with this jig is that it's difficult to fine-tune the position of the fence to get the right fit on the pins and slots. I've also had a problem cutting the slots exactly the same depth because the workpiece tends to rise or sink as it slides over the table saw insert (the metal plate around the saw blade).

To solve these problems, I made a new jig that incorporates a two-part sliding fence that allows the micro-adjustments often necessary to get tight-fitting joints. I also added a ¼" Masonite base to provide a stable, even platform for the workpiece to rest on.

MAKE THE JIG

To make this jig, I cut the ¼" Masonite base (D) to a size of 12" wide by 24" long. After the base is cut, the two-part fence can be added.

This fence consists of a front fence (A) that slides against a stationary back fence (B), see Fig. 1. Rip both fences to a width of 4" out of *flat* 4/4 hardwood and cut them to a length of 24".

FRONT FENCE. The front fence slides on the back fence by means of two 5/16" carriage bolts. Mark the position of these bolts 1½" down from the top edge and centered 3" apart, see Fig. 2.

After marking the position of the holes, drill two ¾"-dia. counterbore holes ⅜" deep to recess the head of the carriage bolts. Then drill 5/16" shank holes the rest of the way through the front fence, see Cross Section in Fig. 2.

SLOT IN BACK FENCE. To make the back fence, a ⅜"-wide slot is cut so it's centered 1½" down from the top edge of the fence, see Fig. 2.

To cut this slot, first drill ⅜"-dia. start and stop holes 4" from each end of the workpiece. Then position the start hole over a ⅜" straight bit on the router table, see Fig. 3.

When the workpiece is positioned, slide the router table's fence over against the workpiece and tighten it down. Then rout the slot between the two holes, see Fig. 3. (Rout this slot in several successively deeper passes.)

FASTEN FENCE TO BASE. After the groove is routed, screw and glue the rear fence to the base so it's flush with the back edge of the base, see Fig. 1. Then mount the front fence to the back fence with 5/16" carriage bolts, wing nuts and washers.

STABILIZING STRETCHER. When making the box joints, the dado blade will cut through the base, refer to Fig. 5. To make certain the Masonite base would stay together in use, I glued and screwed a 2"-high stretcher (C) to the front edge of the Masonite base, see Fig. 1.

RUNNER. I also added a runner to the bottom of the base to guide the jig in the miter gauge slot in the table saw. Rip a 12"-long runner out of ¼" Masonite so it's wide enough to slide smoothly in the slot. Then use a square to align the runner 4" from the left edge of the jig base, and glue it in place, see Fig. 4.

FIGURE 1

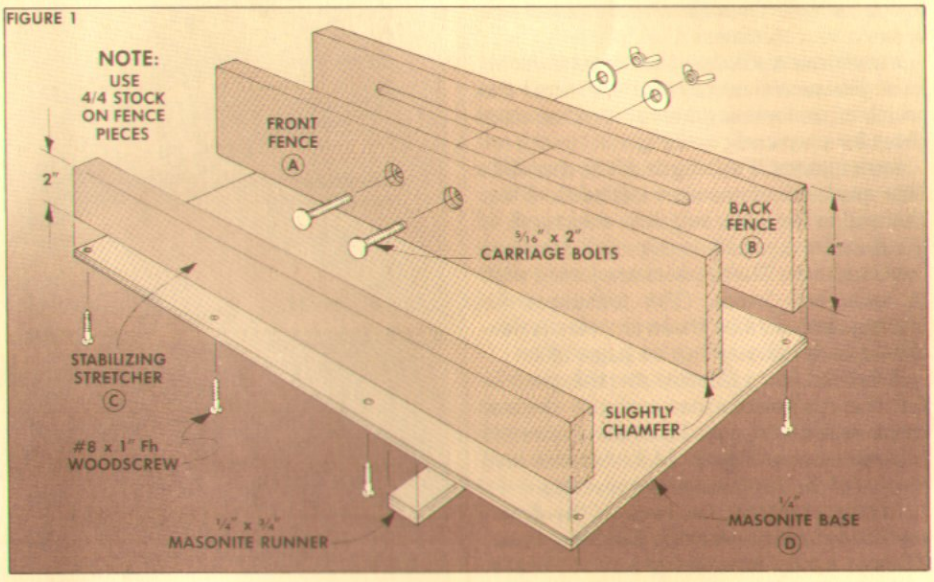

FIGURE 2

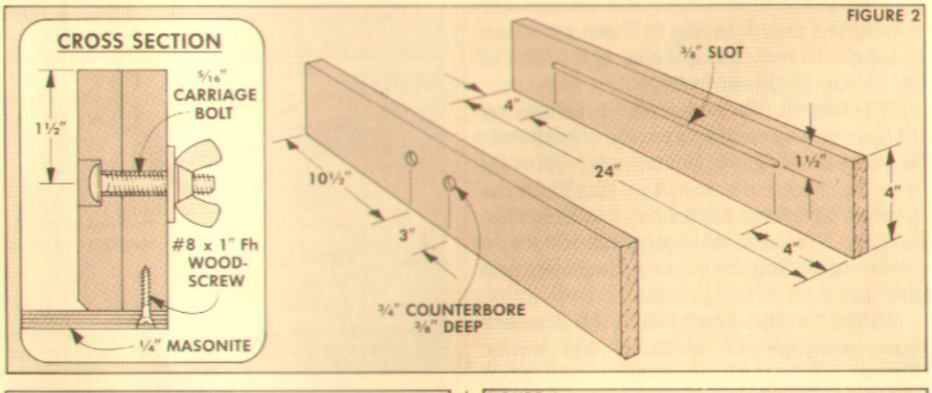

FIGURE 3

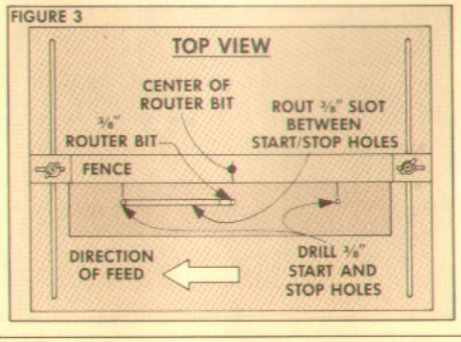

FIGURE 4

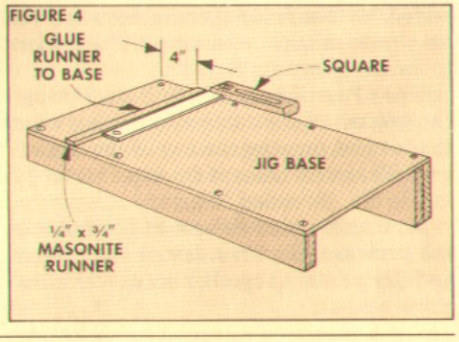

INSTALL THE INDEXING KEY

Now an indexing key is mounted in a notch in the bottom edge of the front fence. (This key maintains even spacing of the slots.)

CUT NOTCH FOR KEY. To cut the notch for this key, set the dado blade to the width you want for the box joint pins and slots. Then adjust the blade height to just over ¼" and cut a slot through the Masonite base and the double fences, see Fig. 5.

Now you can raise the blade height (measuring from the surface of the Masonite) so it's about 1/16" *less* than the thickness of the stock being joined with box joints, see Fig. 6. (This 1/16" reduction makes the notch and thus the key shorter to allow clearance when the joint is cut, refer to Fig. 2, page 18.) Now cut through the fences to form the notch for the key.

INDEX KEY. After the notch is cut, cut the index key from a scrap of hardwood to fit tightly in the notch. Cut the strip 4" to 6" long and then cut off a 2"-long piece for the key and glue it into the notch in the front fence, see Fig. 7. (Save the left-over strip.)

ADJUST FENCE. To adjust the fence for the pin spacing, align the left-over strip with the edge of the slot in the base and adjust the front fence until the key contacts the strip, see Fig. 8.

Then, before cutting the box joints, raise the dado to a height of the thickness of the stock, see Fig. 9.

And one more tip. The index pin will probably need slight adjustments to get the proper spacing for the pins and slots. To help gauge my adjustments, I scribed a line across both the front and back fences so it would be easier to see how far I was moving the front fence, see Fig. 10.

FIGURE 5

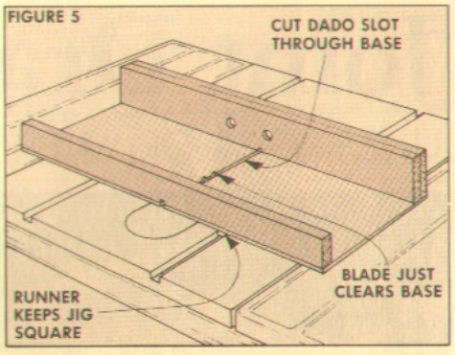

FIGURE 6

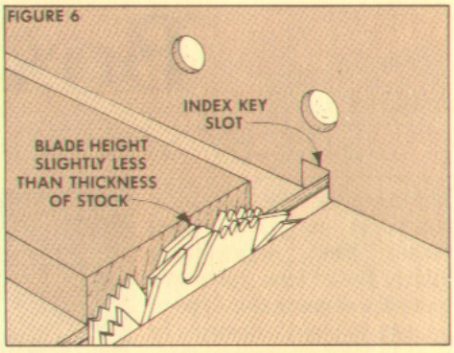

FIGURE 7

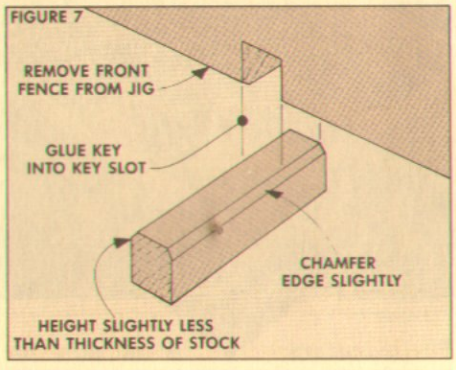

FIGURE 8

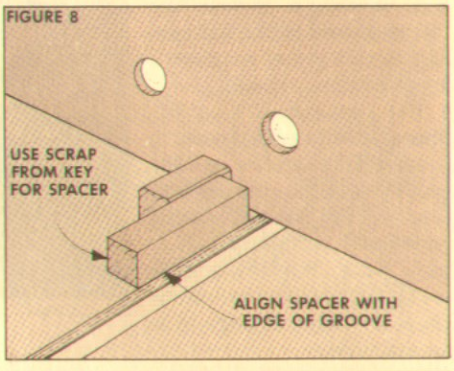

FIGURE 9

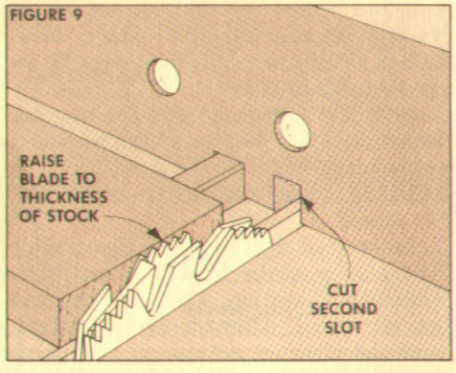

FIGURE 10

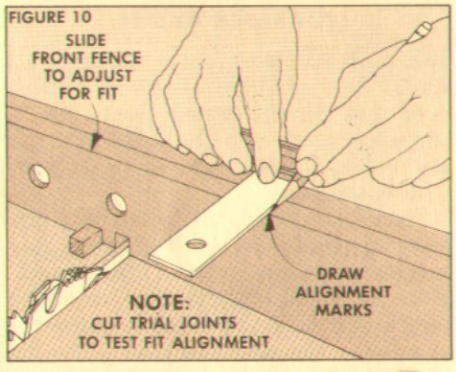

BOX JOINTS . . . *on a router table*

The jig discussed above can be modified for use on a router table. In fact, this router table setup makes beautiful box joint slots. (However, since the slot must be cut in one pass on the router table, it's best suited for making box joints that require slots less than ⅜" by ⅜".)

To modify the jig to cut box joints on the router table, increase the overall width of the base so it's 3" wider than the front-to-back measurement of the router table. This allows for the addition of a pair of 1½"-wide runners at both sides of the base to guide the jig, see Fig. 11.

Follow the same procedure as above to cut and assemble the basic jig. Then to add the runners, screw one runner to one edge of the base. Now place the jig on the router table with this runner butted tightly against the edge. Mark the position of the other runner, and screw it in place. Finally, wax the bottom of the base and the runners so the jig slides smoothly.

FIGURE 11

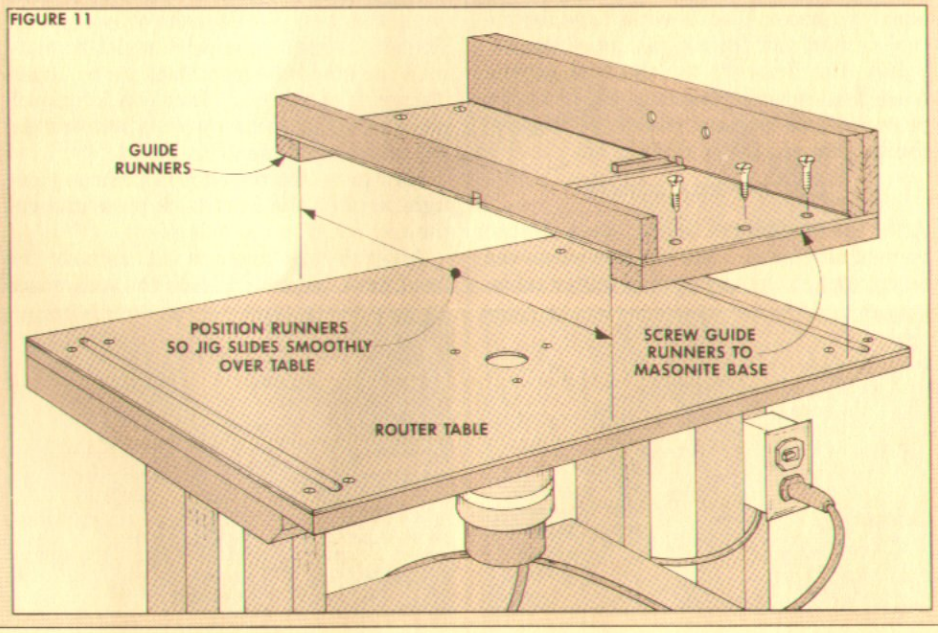

Box Joint Drawers

STEP BY STEP TO BUILDING A DRAWER WITH BOX JOINTS

The box joint jig shown on the previous two pages makes good, tight-fitting joints. But, tight joints are just part of using this type of joinery to build a drawer. In fact, building a drawer (like the ones used on the tool cabinet in this issue) requires a lot of planning ahead.

The problem is that the pins and slots must be cut in a specific sequence so the grooves for the drawer bottom and the runners can be positioned properly. (Editor's Note: For this article we're using the drawers for the tool cabinet on page 15 as an example.)

CUT STOCK TO SIZE

To make the drawers for the tool cabinet, I started by resawing 4/4 stock to a thickness of ¾" for the drawer fronts, backs, and sides. Then I cut the pieces to length and width, making sure the ends were square, see page 15.

Shop Note: When making box joint projects I generally cut the stock wider than necessary to allow for what I call "creep." If the slots and pins aren't *exactly* what they're supposed to be, the combined dimension of the slots and pins — the finished joint — ends up slightly narrower or wider than I planned. In this case, I trim the pieces to final width after cutting the box joints so the top and bottom pins are equal thickness. This is what I did for the tool cabinet and the old-fashioned phone.

But, the drawers for the tool cabinet must fit a specific opening. So I cut the pieces to final size and risked the width of the bottom pin being slightly off.

CUT THE BOX JOINTS

After the stock is cut to size, mark the top edge of all pieces. Then the box joints can be cut on a table saw or on a router table. The procedure is the same on both, but I used the router table on the drawers because my dado blade didn't make a satisfactory cut. (See page 20 for more on this problem.)

SET THE JIG. To make sure the pins are cut to the correct length, set the bit height (or the blade height) to the exact thickness of the stock. Then make a trial joint on two test pieces.

FRONT/BACK PIECES. Start by placing the top edge of the front/back test piece against the index key. Then rout the first slot, see Fig. 1. After the first slot is cut, move the piece so the just-cut slot straddles the key and cut the next slot. Repeat until slots have been cut across the workpiece, see Fig. 2.

CUT JOINTS IN SIDES. Next, cut the slots in another test piece for the drawer sides. The side piece begins with a slot to mate with the pin in the front/back piece. To set the width of this slot, place the front/back piece on the jig so its top pin is between the key and the bit, see Fig. 3.

Now press the top edge of the side piece tight against the front/back piece and cut the top notch in the side piece.

After the top notch is cut, remove the front/back piece and slide the side piece over until the just-cut notch is over the key. Then cut the remaining slots.

TEST FIT. Now test the fit of this trial joint. It should be a loose friction fit — just loose enough to allow for swelling when the glue is applied. If the joint is off, it's because the index key is either too far from or too close to the bit (blade) and thus the pins are wider or narrower than the slots.

To make adjustments, move the fence so the key is closer to the bit for a looser fit, or farther from the bit for a tighter fit. Then make another trial joint, and proceed to cut the joints in all the pieces for the drawer.

CUT THE GROOVES

After the joints are cut, the grooves for the drawer bottom can be cut on the table saw. These grooves are ⅛"-wide by 3/16"-deep for the ⅛" Masonite bottom.

Shop Note: When making a drawer, if the drawer sides bow out even slightly, the drawer will bind against the runners. For this reason, before I cut the groove for the bottom, I sort the pieces so they all bow toward the *inside* of the drawer. Then, when the drawer is assembled, the drawer bottom will push the sides outward, straightening the bow.

BOTTOM GROOVE POSITION. To make sure the groove for the drawer bottom isn't visible on the drawer front, set the saw so the blade aligns with the bottom edge of the bottom *slot* in a *side* piece, see Fig. 4. (This way, when the groove is cut in the front pieces, it will slice through part of a pin that is only visible on the drawer's side, see Fig. 5.)

After the saw fence is positioned, cut grooves in all four pieces. (Make certain the bowed surface is toward the saw table.)

FIGURE 1

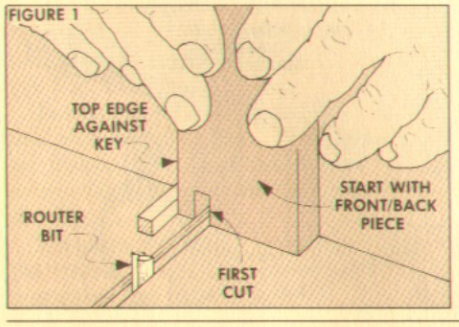

FIGURE 2

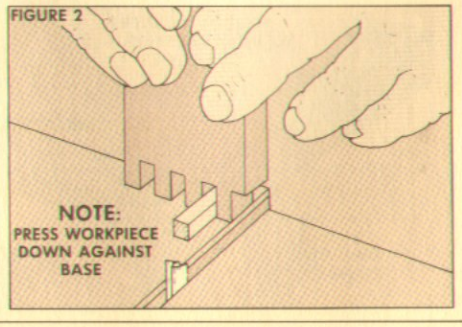

FIGURE 3

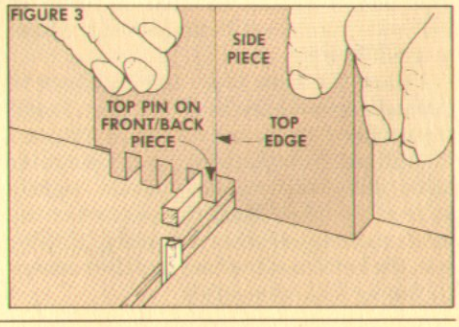

MAKE DRAWER BOTTOMS. Now cut the bottoms out of ⅛" Masonite to fit between the bottoms of the grooves. (Cut the bottom just a tad loose so it doesn't get hung up during assembly.)

DRAWER RUNNER GROOVE. Before assembly, the 3/16"-deep grooves for the drawer runners are cut on the outer surface of the side pieces. To cut these grooves, adjust the fence so the blade aligns with the upper edge of the second slot on the side pieces, see Fig. 6.

Now make the first pass on the outside face. Then widen the groove by making repeated passes until the groove is exactly the width of the slot.

ASSEMBLY

Now the drawer can be assembled. To simplify this process, I used a "squaring form" and beveled clamping blocks.

SQUARING FORM. The squaring form is made from two pieces of plywood or particle board cut to the same dimensions as the inside of the drawer, see Fig. 7. This form keeps the sides from buckling in when the clamps are tightened.

CLAMPING BLOCKS. To make sure the clamping pressure is evenly distributed along the corners, I made some beveled clamping blocks. Because pipe clamps apply more pressure close to the pipe, I beveled the blocks to force the clamping pressure upward, see Fig. 9.

ACTUAL ASSEMBLY. To assemble the drawer, first brush glue on the pins and slots and join both side pieces to the drawer's back. Then slide the bottom into place. And finally, put the front in place.

With the drawer assembled, place the squaring form inside. Then draw the clamps up tight, see Fig. 8.

FINAL TOUCHES. After the glue is dry, the drawer is ready for a few final touches. First, chisel out the pin blocking the rear of the runner groove, see Fig. 10.

Next, fill the void in the sides (created by the groove for the bottom) with wood putty matching the end grain color.

And finally, I rounded over the inside top edge of the drawer with a ¼" round-over bit, see Cross Section in Fig. 11.

MAKE THE DIVIDERS

After the drawers were assembled, I made a divider system to fit inside the drawer, see Fig. 11. For the dividers, use either ⅛" Masonite or resaw slats from the thin waste left from making the drawer pieces. Then cut the strips to length to fit the inside dimensions of the drawers.

INTERLOCKING JOINTS. Now the interlocking joints can be cut. This is a relatively easy operation on the box joint jig. Just cut notches at the ends of the dividers. (Make these cuts in several dividers at once, see Fig. 12.) Then adjust the jig to cut the interlocking slots, see Fig. 13.

FIGURE 4

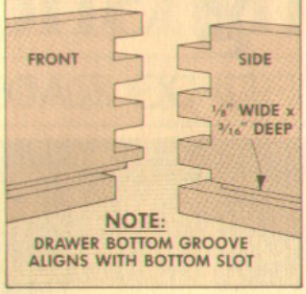

FIGURE 5

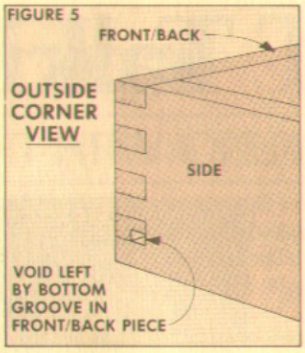

FIGURE 6

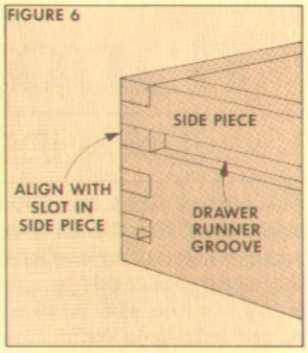

FIGURE 7

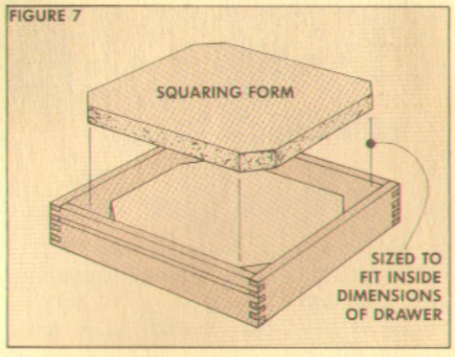

FIGURE 8

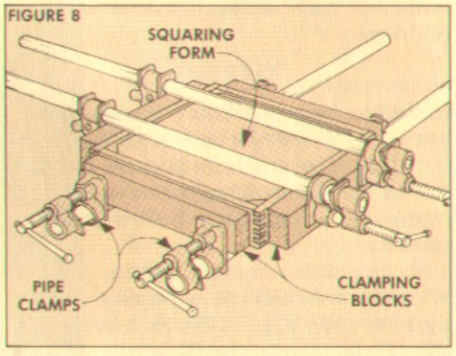

FIGURE 9

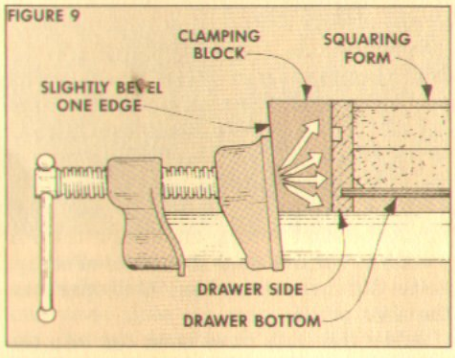

FIGURE 10

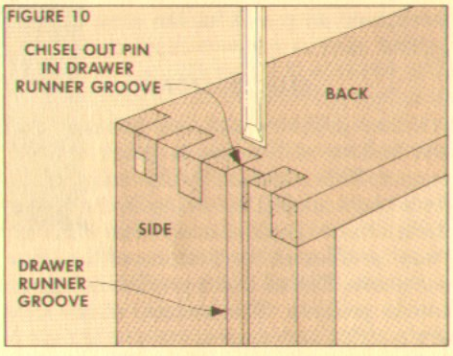

FIGURE 11

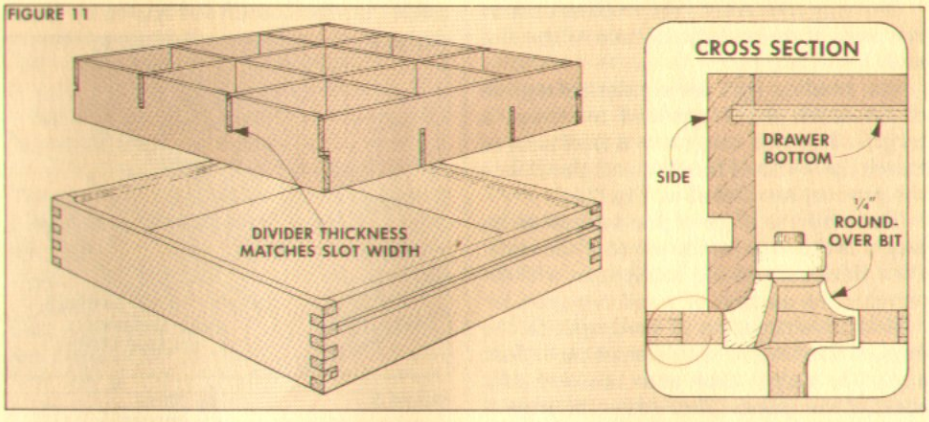

FIGURE 12

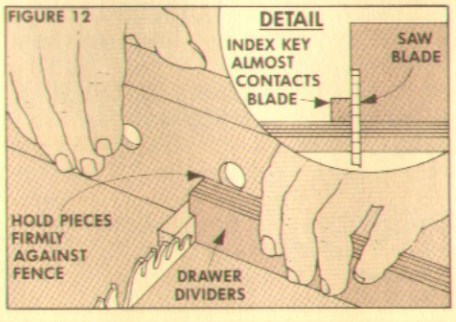

FIGURE 13

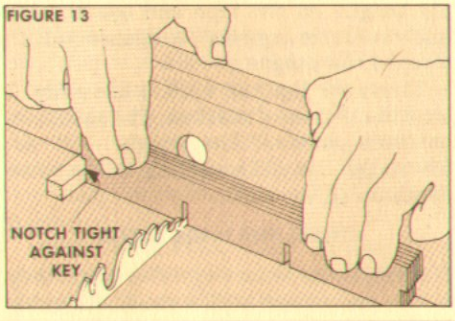

Talking Shop

DEALING WITH THE DADO BLADE DILEMMA

I've always liked box joints. But, I've never liked the slot an average dado set makes when cutting box joints. The back of the workpiece tends to chip out and the bottom of the slot is usually rough and ragged. After a little experimenting, I came up with some solutions to these problems.

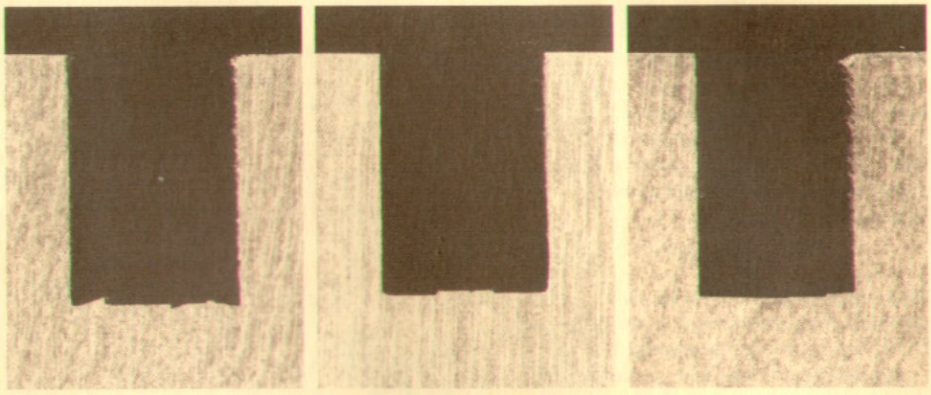

CHIPOUT

One of the biggest headaches when cutting box joints is that the back of the slot chips out. This chipout occurs because the back side of the slot is unsupported and a little chunk tears loose just before the dado blade can cut it off.

To stop this chipout, I put a piece of Masonite between the workpiece and the jig fence, see Fig. 1. As each successive slot is cut, move the Masonite and the workpiece as a unit so the area directly behind each new slot is supported.

SLOT BOTTOMS

Another problem with box joints is that the bottom of the slot is rough and unsquare. This is caused by the design of the dado blade itself. Depending on the type of dado, there could be several different "bad" profiles on the bottoms of the slots, see photo. But all these profiles boil down to one problem. The bottoms of the slots are not flat and square.

One way to correct this problem on narrow slots is to sand the bottom of the slot with a sanding jig.

The sanding jig I use consists of a piece of 5/4 stock that's grooved to accept a tongue. Rip this tongue to a thickness to match the width of the slot, and glue it into the groove, see Detail in Fig. 2.

Then rip the edge of the tongue so its height is the same as the depth of the slots. (The thickness of the sandpaper will determine the amount of wood removed.)

Now mount a strip of sandpaper to the edge of the tongue with carpet tape. Just apply the carpet tape onto the back of a sheet of sandpaper. Then press the edge of the tongue on the tape and use a sharp knife to cut through the sandpaper on both sides of the tongue.

To use the jig, just work it like a file to sand the bottom of the slots. The shoulders on both sides of the tongue will automatically stop the sanding at the same depth on all the slots.

CHISELING WIDE SLOTS

If the slots are wider (say ⅜" or more) they can be cut square with a chisel. To guide the chisel, I use a simple jig, see Fig. 3.

This jig actually performs two functions: 1) it supports the chisel so it's perpendicular to the workpiece, and 2) it positions the chisel to maintain a uniform depth on all the slots.

However, since you are chopping away at the bottom of each slot, it's best to start out with the slots a little undersize. That is, adjust the depth of cut on the dado blade so it's about 1/16" less than the thickness of the stock being joined.

To make the guide jig, use the box joint jig (at the same setting used to cut the box joints) to cut five slots in a piece of scrap. Note: Cut these slots about ⅛" deeper than the slots on the joint.

After the slots have been cut into the guide jig, the center slot has to be hand-chiseled to a square, flat bottom. Then trim the pins on the end of the jig so the depth of the center slot equals the final depth needed for the slots on the workpieces (which is the thickness of the stock).

Next, glue a piece of Masonite to the ends of the pins to act as a depth stop, see Fig. 3. Then glue spacing pins to the depth stop to align with the slots on either side of the center slot.

To use the jig, clamp the workpiece to a backing board. (The backing board prevents chipout.) Then place the center slot of the jig on the first slot of the workpiece.

Hold a chisel flat against the bottom of the center slot in the jig and strike the chisel with a mallet, see Fig. 4. A few sharp blows should drive it through the wood, leaving a clean, square bottom.

FIGURE 1

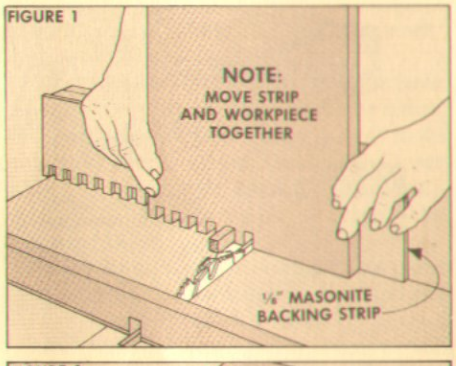

FIGURE 2

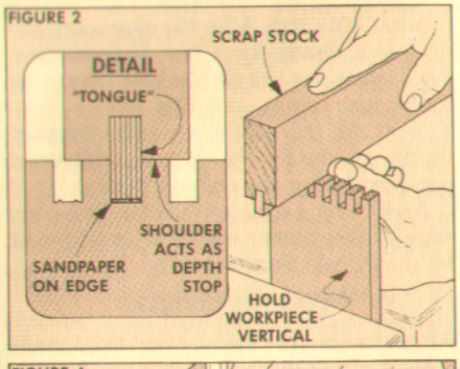

FIGURE 3

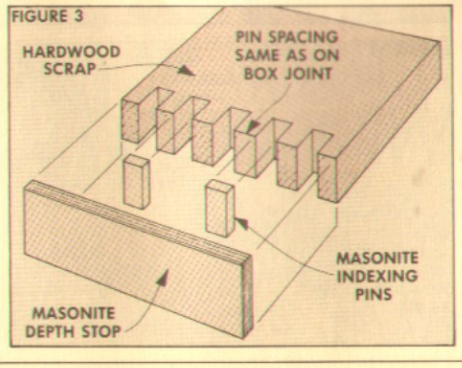

FIGURE 4

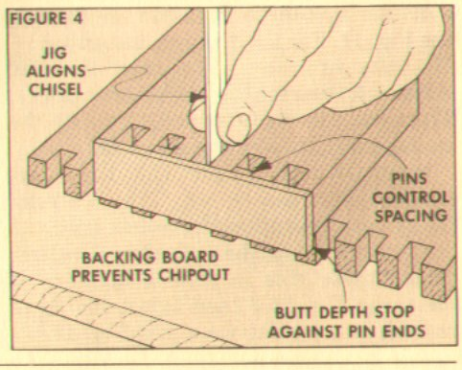

Finishing: The Final Touch

MATERIALS & TECHNIQUES FOR A HAND-RUBBED SURFACE

For years I was frustrated with the fact that I wasn't able to get the kind of deep finish on my projects that I saw on furniture produced in factories or at a local cabinetmaker's shop.

After some investigating (and a lot of experimenting), I found there were two things I wasn't doing that the "professionals" did. First, I wasn't using spray equipment to obtain a uniform finish. (But there's no way I could fit a spray booth into my overcrowded shop, not to mention my budget).

The other problem was one I could solve: I had to "finish the finish." I discovered that if I took the time to properly finish the finish (that is, rub out the top coats), I could get a beautiful, smooth finish *without* spraying . . . the kind of finish everyone loves to run his hand over.

FINISHING THE FINISH

For most projects shown in *Woodsmith*, we usually recommend tung oil products or other penetrating oil finishes (like Watco or Minwax oils). These finishes soak down into the wood. So as you apply them, you're actually rubbing them flat and smooth.

Imperfections (such as brush marks and runs) and foreign substances (dust, brush bristles) don't cause much of a problem. (Which is why oil finishes are so easy to use.)

Just the opposite is true with surface finishes (such as varnish, lacquer, and shellac). The whole point of these finishes is to build up layers of protection. But with each layer, imperfections sneak in where you don't want them. Then the finish has to be finished by rubbing out the imperfections with very fine abrasives.

THE FIRST STEPS

Rubbing out the top coats is only effective if you're not starting with a surface that looks like a gravel road.

SURFACE PREPARATION. The first step in any finishing procedure is to prepare the bare wood used on the project by planing, sanding and correcting any defects. (See the article on surface preparation in *Woodsmith* No. 38.)

FILLING. If you're going to use an oil finish, nothing else has to be done to the wood surface. However, if you want to use a top coat (varnish, lacquer, polyurethane, or shellac) and you're working with a porous wood (like oak or walnut), the next step to get a perfectly flat surface is to apply a paste wood filler. This will fill the minute pores in the wood so the top coats don't soak into these small pockets. (See *Woodsmith* No. 39 for more on fillers.)

Sanding the filler is the first opportunity to ensure that the surface of the wood is smooth before any top coats of finish go on. The entire surface should be sanded with 150 or 180-grit, and you might want to go over it one more time, moving up to 220-grit before the top coats are applied.

Once the filled surface is sanded flat, the next step is to apply a sealer (if needed) and then brush on the top coats of finish. And this is where problems and questions begin.

DIFFERENT FINISHES. The procedure used to apply the top coats depends a little on what kind of finish is used. Varnish, lacquer, shellac, and polyurethane all require slightly different procedures to apply them. And each has its own sealers and rubbing methods to get the sheen you want.

The specifics on each type of finish will be handled in upcoming articles. But the overall procedure and the materials needed to do the job are the same for all top coats. That is, after each coat is applied, you have to use some sort of abrasive to smooth it.

NON-CLOGGING SANDPAPER

After the first coat of sealer or finish is applied, what's the best way to smooth it? When I start to "finish the finish," I use a non-clogging, zinc stearate-coated sandpaper. This is the sandpaper that has a white or light gray appearance. (The color is the result of a coating of zinc stearate on the surface of this sandpaper.)

Both 3M and Norton produce sandpapers with zinc stearate coating. 3M calls theirs "Tri-M-Ite Fre-Cut" and Norton calls theirs "No-Fil Adalox." They're both available in grits from 80 up to 400. (See Sources, pg. 24.)

The 3M paper is covered with silicon carbide abrasive applied in a textured pattern. It's hard and sharp, cuts finishes quickly, and leaves a fine, clean scratch.

The Norton paper is covered with aluminum oxide abrasive applied in a uniform pattern. It's not as sharp as silicon carbide, but it's more durable and better for power sanding. (For a complete explanation of sandpaper abrasives, see *Woodsmith* No. 33).

So what good is zinc stearate? The zinc stearate coating is very slippery and helps the sandpaper slide much more easily through the finish coats than standard silicon carbide or aluminum oxide sandpaper.

It also prevents the sanding residue from clogging up on the surface or gumming up the sandpaper. When little balls of finish do clog up on the sandpaper (especially with shellac), it's easy to brush them off.

I usually start by sanding with 280-grit zinc stearate sandpaper. (For hard finishes like bar-top varnish or polyurethane, I may start a little coarser, 220-grit or even 180-grit.)

USE A SANDING BLOCK. Since this is the first step in producing a flat surface for the final top coat, it's important to mount the sandpaper to a rubber or cork sanding block. (If the paper is held in your hand without a block behind, it will tend to follow contours rather than cut off the high spots.)

SAND UNTIL FLAT. When sanding most finishes, a soft white sanding dust will be produced. Keep wiping the dust out of the

way and check the surface to see if it's flat. It's flat when the surface is dull all the way across (glossy spots indicate valleys). Once it's flat, apply the next coat of finish.

A CAUTION. No matter what kind of sandpaper you use, be careful when sanding stained wood. It's best in this case to build up a few layers of sealer or finish on top of the stain *before* sanding. Otherwise the sandpaper can cut through the finish and into the stained wood which will leave a light spot that's almost impossible to darken again with stain.

SANDING FOR ADHESION. There's another reason to sand between coats. Most of the new synthetic varnishes (such as polyurethane) dry so hard and smooth that the next coat won't stick unless the previous coat is roughened first. It doesn't hurt to slightly roughen any finish to help the next coat adhere (although lacquer and shellac tend to melt the previous coat and "weld" to it).

STEEL WOOL

What about steel wool? A lot of books and the instructions on many finish container labels recommend using steel wool to rub between coats of finish.

In general, steel wool shouldn't be used on *flat* surfaces since it forms around the contours of the imperfections you're trying to remove. You'll get a much better (flatter and smoother) finish if you use zinc stearate sandpaper mounted to a sanding block to sand between coats. But this is only practical on flat surfaces.

Steel wool (rather than worn sandpaper) should be used on moldings, curved surfaces, carvings, and all the nooks and crannies that are difficult to sand.

A TIP. One of the disadvantages of using steel wool is that it breaks apart and the strands get caught in the wood grain and corners. One of our readers sent in a good tip on how to clean up these strands.

Cover a magnet with cheesecloth and run it over the wood surface — especially in corners, holes, carvings, or tight spots. Then periodically shake off the cloth to rid it of the steel wool particles.

WOOD FINISHING PAD. If you don't want to put up with all the problems associated with steel wool, there's another product that will do approximately the same thing.

It's a Wood Finishing Pad (made by 3M). This is a pad of Scotch-Brite, a synthetic non-woven material that 3M originally developed for industrial floor finishing. It doesn't splinter like steel wool and can be used wet or dry. It's roughly comparable to a 00 steel wool pad.

SANDING THE TOP COAT

As each coat of finish is applied, it's sanded with zinc stearate sandpaper (or steel wool on rounded surfaces) to remove the imperfections and produce a flat surface. But when the final coat of finish is applied and completely dry, there's a new objective.

To produce the sheen you want (from satin to high gloss), abrasives are used on the final coat. This is where the art of finishing the finish comes into play.

I usually start sanding with a very fine silicon carbide paper (3-M's "WetOrDry Tri-M-Ite" and Norton's "Tufbak Durite").

Note: Silicon carbide paper is the black-colored sandpaper usually used by auto finishers. If you're having trouble finding the very fine grades needed to sand out top coats (400, 500, 600, and the ultra-fine 1200-grit), try an auto paint supply store.

START WITH 400 OR 600 GRIT. I start sanding most finishes with 400-grit silicon carbide paper. If the surface is fairly smooth to begin with, I may start with 600-grit. (I've had a couple bad experiences rubbing through some of the thinner finishes with 400-grit.)

USE A BLOCK. Wrap the piece of sandpaper around a felt or rubber block to help wear away any high spots in the finish.

> *"Abrasives are used on the final coat. This is where the art of finishing the finish comes into play."*

LUBRICANT. To help speed up the cutting action of the sandpaper and keep the residue from building up, I use oil or water as a lubricant. The choice between these two lubricants depends on how fast you want the sandpaper to cut.

OIL. Sandpaper cuts more slowly when oil is used because the oil creates a thicker film. This allows more control over the cutting action. (With light pressure, the sandpaper tends to slide over the surface, not cutting as much.)

What kind of oil? Paraffin oil (sometimes sold as "rubbing oil") is the traditional choice of most finishers. But common mineral oil (from the drugstore or grocery) can also be used. It's a little thick but can be cut 10-20% with mineral spirits.

One of the problems with using oil is that it leaves a film on the surface. (To clean it off, I wipe it with a cloth *lightly* moistened with naphtha.)

WATER. Water, on the other hand, can be easily wiped off with a sponge or chamois. (But if it's not wiped off soon enough it can evaporate leaving a chalky abrasive residue.)

Using water as a lubricant allows the sandpaper to cut much faster and more cleanly. However, be careful. It works so well that you can cut right through the finish. (I usually add a little dish detergent to the water to help the abrasive slide over the surface, and not cut quite so fast.)

Caution: Never use water as a lubricant when rubbing down shellac or Deft Clear Wood Finish. These finishes may start to dissolve and soften. Shellac turns white when exposed to water — that's why you get a white ring when you set a wet glass on a shellac surface.

TWO METHODS. Whether you choose oil or water, there are two approaches to sanding. The first is to dip the sandpaper into a dish of soapy water or rubbing oil and then start sanding.

The other method makes more mess, but it allows more control. Splash some water or oil right on the work surface and spread it around to get a uniform, thin layer all over the work surface.

Now start sanding. Sand in long straight strokes *with* the grain — cross-grain scratches become obvious just like sanding bare wood. As soon as the surface begins to dry out, add more oil or water (or dip the sandpaper back into the dish).

Occasionally, check the surface by wiping off the residue with a dry cloth. Stop sanding when the surface is flat. (Look for shiny spots — they indicate low spots.)

CUTTING THROUGH THE FINISH. Be careful not to sand too much, it's easy at this point to cut through the finish — especially if only a few coats of finish were applied. Should this happen, clean off all the oil or allow the water to dry thoroughly, and apply more coats of finish.

SCRATCH PATTERN

After the surface is flat, you have to decide how much sheen you want: dull, satin, gloss, or a mirror-smooth finish. But there's an irony here.

Although we think in terms of the final appearance as being a matter of how *smooth* the surface is, it's really a matter of how *scratched* it is. No matter what kind of abrasive is used, or how fine it is, it can only do its job by scratching the surface.

The scratch pattern affects the final appearance of the finish. By using *coarse* abrasives, the scratches created are wide and deep. As light rays hit these wide scratches, they bounce around and come out in all different directions. The result is what looks like a a soft, satin finish.

By continuing on to *finer* abrasives, the scratches become much narrower and shallower. The light rays don't get lost down in the scratches and the surface has a glossy appearance.

If the abrasives are *super-fine*, the scratches will be so minute that the light rays bounce right off for what appears to be a mirror-like finish.

By choosing the correct abrasives, you're not only obtaining a flat surface, but also controlling the level of sheen — from satin to high gloss.

A SATIN FINISH

After the top coat has been smoothed and flattened with sandpaper, the appearance can be controlled by refining the scratch pattern. If you want a satin or dull finish, rub the surface with 000 or 0000 steel wool.

CONSISTENCY. Steel wool is available in grades from No. 2 (the coarsest) to 0000 (the finest). But these grades are no assurance of quality.

I've opened up 0000 steel wool and found coarse strands almost like No. 1 intermixed in each pad. And some steel wool is so oily that it imparts oil to the finish.

LIBERON STEEL WOOL. For years I've just used whatever brand was available at the local hardware stores. But recently I discovered Liberon steel wool which is imported from England. (See Sources, pg. 24.)

Liberon comes in a roll (rather than pads) so you can cut off just what you need. And since it's made from long strands it's much more resistant to breaking down.

But the best feature of this steel wool is that it's oil free and generally has a good feel to it. I particularly like the finest grade which is somewhere between a 000 and a 0000 grade.

WOOL-LUBE. I like to add Behlen's Wool-Lube as a lubricant when I'm doing the final rubbing with steel wool. (It has the same effect as using oil or water with sandpaper.) Wool-Lube is a gooey material with a consistency that's somewhere between axle grease and Vaseline. When used with 0000 steel wool, it quickly creates a hand-rubbed, satin finish.

To use it, wet a piece of steel wool and wring it out. Then work a glob of the Wool-Lube throughout the steel wool and rub the surface of the workpiece with the grain. As you work, the Wool-Lube and water combination will start to foam up.

Occasionally wipe off the foam with a rag and check your progress. Stop when a smooth, uniformly satin finish is obtained and buff lightly with a clean cloth.

PASTE WAX. Another very popular approach is to use paste wax (Johnson's, Tre-Wax, or Butcher's) to lubricate the steel wool. It doesn't cut as fast as the Wool-Lube, but leaves a glossier surface when it's buffed out.

A HIGH-GLOSS FINISH

On the other end of the spectrum is the high-gloss finish seen on most commercially-made furniture. To obtain this deep, high-gloss finish (without spray equipment), there are a few more steps. The idea is to make the scratches considerably smaller. So the abrasives must be finer.

To obtain a high-gloss finish, once again start with a perfectly flat surface on the top coat of finish. But this time instead of stopping at 400-grit sandpaper, continue on with 600-grit. Then, rub out the surface with even finer abrasives and rubbing oil.

POWDERED ABRASIVES. Pumice and rottenstone are the two most common powdered abrasives used to produce high-gloss and mirror-like finishes.

Pumice is a white-grey material obtained from the ashes of volcanic eruptions. It's graded according to the size of particles: FFFF is the finest, down to FF, the coarsest. (Note: Always check the pumice for foreign matter or large grains before using it.)

Rottenstone is an even finer, black-grey substance. It's made from ground-up limestone and gets its name from the odor that's released when the raw material is broken up. (Fortunately, the odor is gone by the time it reaches the finisher.)

Shop Tip: I keep the pumice and rottenstone in separate salt and pepper shakers so they can be shaken out onto the workpiece when I need them.

RUBBING FELT. Pumice and rottenstone can be worked with a clean, soft cloth. But I prefer a block of rubbing felt since it provides a flat surface and allows the abrasive to move within the fibers. A common size felt block is 1″ thick and 2″ by 4″. (The last one I bought I cut down the middle on the bandsaw to obtain two ½″-thick blocks — one for pumice and one for rottenstone.)

"What impresses me the most about rubbing is it's such an immediate improvement to the surface."

PUMICE. To use the pumice with a felt pad, spread a thin coat of rubbing oil on the surface of the workpiece. Then sprinkle some FFFF pumice around and use the rubbing felt to rub in long even strokes with the grain.

Before long the pumice and oil will mix together into a creamy paste. If there's too much oil, you won't feel any cutting taking place, and if there's too much pumice, the felt will tend to catch rather than glide over the surface.

As you work, check the progress by removing the paste from different sections of the surface. Try to rub all parts evenly (sometimes I count the number of strokes in each area). Pumice can cut quickly, so don't overdo it.

Once the finish is uniformly smooth, clean all the residue off the surface before continuing with finer abrasives.

You may like the sheen produced by the FFFF pumice (sort of a polished satin). But if you want more of a gloss there are three ways to go: rottenstone, rubbing compound, or an extremely fine sandpaper called Micro Mesh.

ROTTENSTONE. Rottenstone is used the same way as pumice. First, clean off all the pumice residue and then switch to a different piece of rubbing felt and follow the same procedure as with pumice. Lightly cover the surface with oil — don't use as much as when working with pumice — and sprinkle some rottenstone on the surface.

The rottenstone burnishes the surface and brings it to a very fine polished appearance. Check this by holding a light at a very shallow angle to the work. You should only see *very* fine scratches (or none at all) in the direction of the grain.

RUBBING COMPOUNDS. Another approach is to use rubbing compounds for the final phase. Rubbing compound is a semi-paste, abrasive/lubricant combination that is used for rubbing out auto lacquers. (Behlen's also makes a rubbing compound for wood finishes, see Sources, pg. 24.) Depending on the brand, there can be two grades: rubbing compound, or the finer polishing compound.

Most rubbing compounds seem to cut a little more slowly than pumice, but faster than rottenstone and leave a high luster.

To use rubbing compound, work a little into a soft, damp cloth or rubbing felt and rub back and forth with smooth, even strokes. If the compound starts to dry out, work in a little more compound. If the cloth starts to get "crusty," rinse it out and add some fresh compound. When you get the sheen you want, buff the surface with a clean, dry cloth.

MICRO MESH. If you really want an extremely fine and uniform scratch pattern, Micro Mesh may be the solution. (See Sources, pg. 24.) It consists of a series of cushioned abrasive pads similar to silicon carbide sandpaper, but they start at 1500 grit and go all the way to 12,000 grit.

Micro Mesh was originally developed to rub out plastic airplane windshields, but is gaining popularity with musical instrument finishers.

CONCLUSION

Rubbing out a finish can be messy and time consuming. Sometimes it's only worth it to bring the *top* (of a table or dresser for example) to a high gloss and just lightly steel wool the rest.

But what impresses me the most about rubbing is it's such an immediate improvement to surface finishes. Simply taking the time to rub out the dust nibs and brush marks with steel wool brings a good feel to the surface.

I used to be in a rush to put a finish on, allow it to dry, and then get it up to the living room so everyone could admire it. No more. The extra time spent finishing the finish produces a lot more ahhhs.

Sources

OLD-FASHIONED WALL PHONE

You can order the hardware and electronic package for the phone from:

DAKOTA WOODWORKS, INC., 470 Elm Street, Kindred, ND 58051; 800-437-4757 ext. 333 (Catalog: $2.00). *Party Line Phone Kit*, Order No. 2PLB (specify "T" for "touch-tone" or "R" for rotary dial). This kit includes all of the reproduction hardware, electronics package, wiring instructions, and blueprints. (Note: The blueprints show a slightly different design from the one presented in this issue. But the hardware will work on both designs.) The price of the kit is $124.69 plus $7.80 shipping and handling.

TOOL CABINET

You can order the hardware for the tool cabinet from:

THE WOODWORKERS' STORE, 21801 Industrial Boulevard, Rogers, MN 55374; (612) 428-2199 (Catalog: $2.00). *Piano Hinge* (1), brass, 1½" x 72", Order No. D2902-03, $7.95. *Threaded Inserts* (4), ¼-20, Order No. D3960, $.32 each. *Shelf Supports*, brass, Order No. D9156, $.15 each. *Round Magnetic Catch* (4), (Note: The hole size is misprinted as 15/16" in the catalog. It actually is 7/16".), Order No. D4186, $.95 each. *Card Holder with Pull* (4 packs), 2 holders and pins per pack, 1½" x 3½", Order No. D3059, $1.10 per pack.

The card holder listed above is from stamped metal. A higher quality cast brass holder is available from Garrett Wade (see address below — Classic Hardware catalog: $1.00). *Cast Card Frame and Pull*, 1½" x 2½", Order No. A58.01, $3.90 each.

TEMPLATE GUIDE BUSHINGS

Every time we feature a project that uses a router template guide bushing, we get a small stack of letters asking: what a guide bushing is, how it works, and where can I find one for *my* router?

In this issue we used a guide bushing to make the decorative groove on the door of the phone (see Figs. 3 and 4 on pg. 5).

The guide bushing is simply a metal collar that attaches to the router's plastic base and fits *around* the router bit. The bushing rubs along the side of a template following its shape. Since the router bit is inside this bushing, it routs this shape in the wood.

The template for the phone was just a rectangular block of plywood. But guide bushings are also used with dovetail joint fixtures (see *Woodsmith* No. 22), butt-hinge templates, and sign-making templates.

SEARS' BUSHINGS. Sears sells a guide bushing set to fit their Craftsman routers. It includes three different bushings with outside diameters of 5/16", 7/16", and ⅝".

Before 1984 the set was made from heavy steel plate. Unfortunately, the current bushings are made from a thinner gauge metal. The only advantage we see in

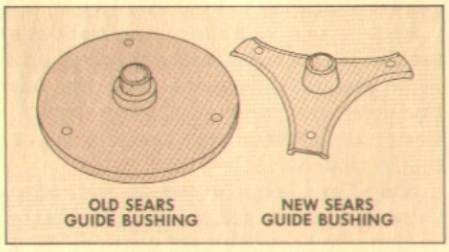

the new design is it's easier to see your workpiece while routing. The set is listed in the 1985-86 Sears Tool Catalog as order number 9-HT-25082, $7.49.

DIFFERENT ROUTERS. Other companies (Black and Decker, Bosch, Porter-Cable, and Makita) all manufacture guide bushings that fit their individual routers. Some of the bushings fit more than one brand of router, so it's best to check with a dealer who carries accessories for your router.

UNIVERSAL BASE PLATE. One solution to the problem of incompatibility between brands is Vermont American's universal base plate. The plastic base plate looks like

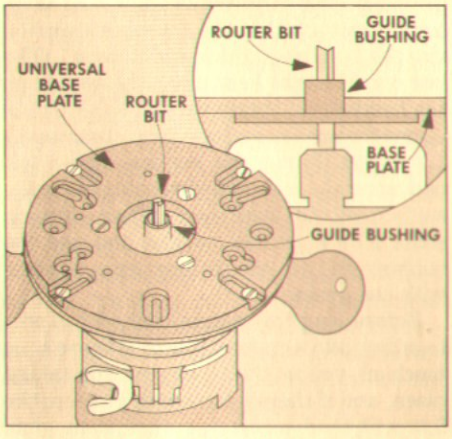

a piece of Swiss cheese because of all the various hole locations that permit it to fit just about every standard router below 1¾ H.P with a *round* base.

The universal base plate comes with four bushings (5/16", 7/16" short and long lengths, and ⅝" outside diameters). The set can be ordered from:

WOODCRAFT SUPPLY CORP., 41 Atlantic Ave., P.O. Box 4000, Woburn, MA 01888; 800-225-1153 (Catalog: Free). *Router Guide Bushing Set with Universal Base Plate*, Order No. 11V12-VA, $9.95 ppd.

CARPET TAPE

Double-sided carpet tape was mentioned in a couple spots in this issue. It's useful for temporarily holding parts while screwing, gluing, or marking.

We prefer the cloth-back (woven) carpet tape instead of the plastic type. It holds tight but releases without pulling up slivers of grain or leaving gummy adhesive deposits. (Note: Should there be any adhesive left on the wood it can be cleaned off with lacquer thinner — which must be done *before* finishing).

Double-sided carpet tape is available at most hardware stores. We recently bought a 1½" wide by 12-foot-long roll for $2.29.

RUBBING FINISHES

We order most of our finishing supplies from the following companies:

GARRETT WADE COMPANY, 161 Ave. of the Americas, New York, NY 10013; 800-221-2942 (Catalog: $3.00). *Liberon Steel Wool*, imported from England, #0000/#000 grade, ½-lb. roll, Order No. 51R10.01, $3.35. *Small Felt Block*, 1" x 2" x 4", Order No. 99P09.01, $5.00. *Micro Mesh Kit*, 18 sheets, foam block, instructions, Order No. 51PO9.01, $37.25.

WOOD FINISHING SUPPLY CO., INC., 1267 Mary Drive, Macedon, NY 14502; 315-986-4517 (Catalog: $2.50). *Behlen's Wool-Lube*, pint, Order No. B720-1355, $6.16. *Behlen's Rubbing Compound*, neutral, pint, Order No. B730-01115, $5.95.

WOODFINISHING ENTERPRISES, 1729 N. 68th St., Wauwatosa, WI 53213; 414-774-1724 (Catalog: Free). *Micro Mesh*, individual 4" x 6" sheets (see catalog for grits), $2.50 per sheet.

Paraffin (rubbing) oil, pumice, rottenstone, and paste waxes can be ordered from all three sources listed above.

The 3M Wood Finishing Pad can be purchased from most hardware stores carrying 3M products. List price: $1.59.

Wet-or-dry silicon carbide sandpaper and auto rubbing compound can be purchased at most local auto supply dealers.

Non-clogging, zinc stearate sandpaper can be purchased from many dealers who carry 3M or Norton products. It can also be ordered in quantity from Garrett Wade (address above) and from:

JAMESTOWN DISTRIBUTORS, 28 Narragansett Ave., P.O. Box 348, Jamestown, RI 02835; 800-423-0030 (Catalog: Free). Jamestown Distributors has a wide selection of sandpaper (zinc stearate in both aluminum oxide and silicon carbide and wet-or-dry silicon carbide). They all can be ordered by the single sheet or in quantity.